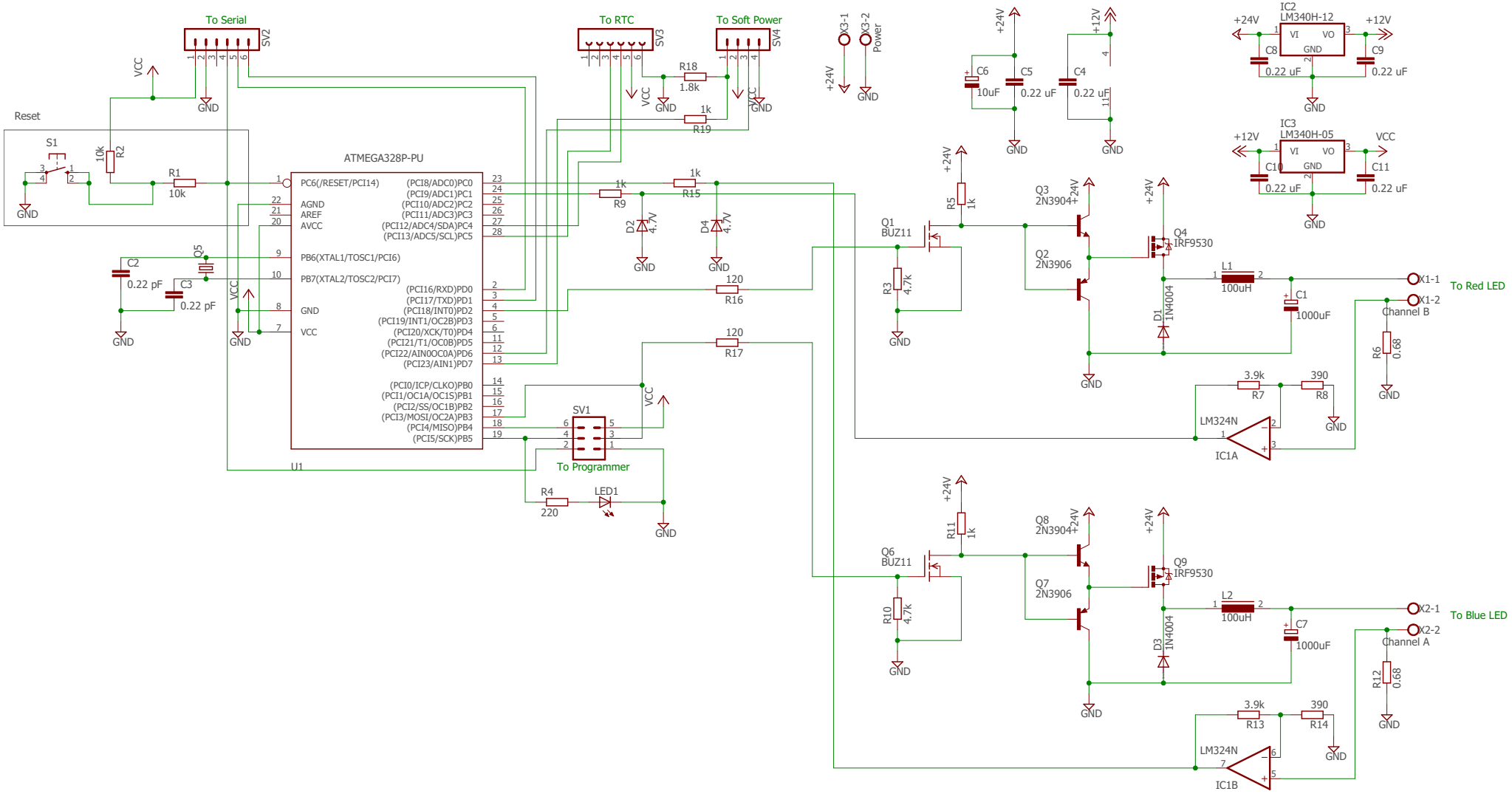
To Serial
SV2
To RTC
SV3
To Soft Power
SV4
X3-1
X3-2
Power
Reset
S1
R1
10k
R2
10k
ATMEGA328P-PU
PC6(/RESET/PCI14)
AGND
AREF
AVCC
PB6(XTAL1/TOSC1/PCI6)
PB7(XTAL2/TOSC2/PCI7)
GND
VCC
(PCI8/ADC0)PC0
(PCI9/ADC1)PC1
(PCI10/ADC2)PC2
(PCI11/ADC3)PC3
(PCI12/ADC4/SDA)PC4
(PCI13/ADC5/SCL)PC5
(PCI16/RXD)PD0
(PCI17/TXD)PD1
(PCI18/INT0)PD2
(PCI19/INT1/OC2B)PD3
(PCI20/XCK/T0)PD4
(PCI21/T1/OC0B)PD5
(PCI22/AIN0OC0A)PD6
(PCI23/AIN1)PD7
(PCI0/ICP/CLKO)PB0
(PCI1/OC1A/OC1S)PB1
(PCI2/SS/OC1B)PB2
(PCI3/MOSI/OC2A)PB3
(PCI4/MISO)PB4
(PCI5/SCK)PB5
U1
Q5
C2
0.22 pF
C3
0.22 pF
R18
1.8k
R19
1k
R9
1k
R15
1k
D2
4.7V
D4
4.7V
R16
120
R17
120
SV1
To Programmer
R4
220
LED1
Q1
BUZ11
R3
4.7k
R5
1k
Q3
2N3904
Q2
2N3906
Q4
IRF9530
D1
1N4004
L1
100uH
C1
1000uF
X1-1
X1-2
To Red LED
Channel B
R6
0.68
R7
3.9k
R8
390
LM324N
IC1A
Q6
BUZ11
R10
4.7k
R11
1k
Q8
2N3904
Q7
2N3906
Q9
IRF9530
D3
1N4004
L2
100uH
C7
1000uF
X2-1
X2-2
To Blue LED
Channel A
R12
0.68
R13
3.9k
R14
390
LM324N
IC1B
C6
10uF
C5
0.22 uF
C4
0.22 uF
IC2
LM340H-12
VI
VO
GND
C8
0.22 uF
C9
0.22 uF
IC3
LM340H-05
C10
0.22 uF
C11
0.22 uF
+24V
+12V
VCC
GND