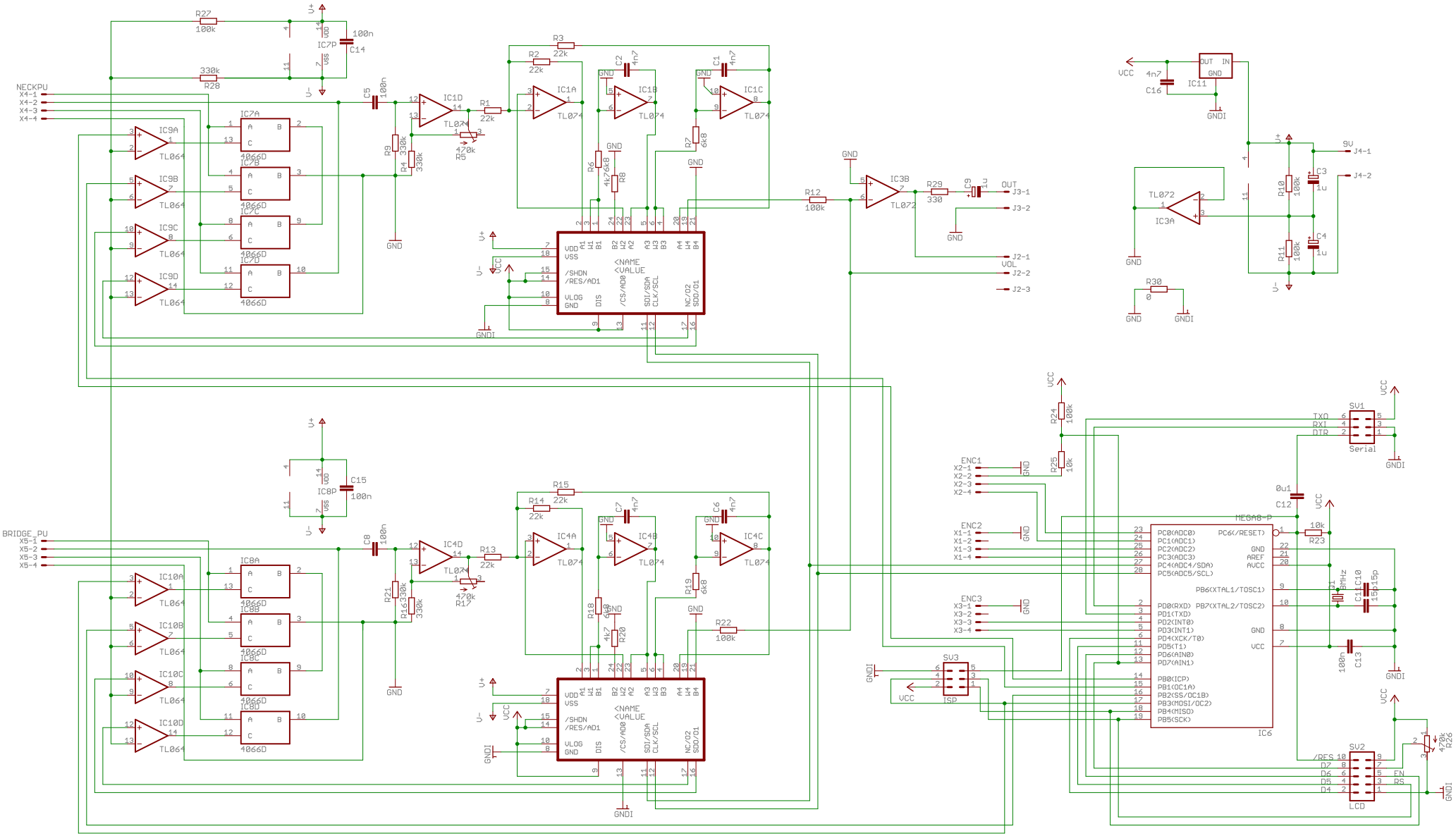

01.02.2010 08:19:49 f=0.60 C:\Users\Chris\Documents\eagle\git\git.sch (Sheet: 1/1)