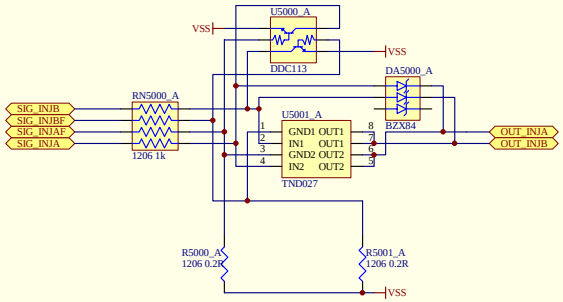

Title	Saturated Injector Driver	
Size B	Number 1	Revision 0
Date: 27-Jul-2016	Sheet of	
File: C:\Documents and Settings\Matthew\Desktop\Dropbox\work\PCBs\RABBIT\current\RABBIT_ECU.Ddb		