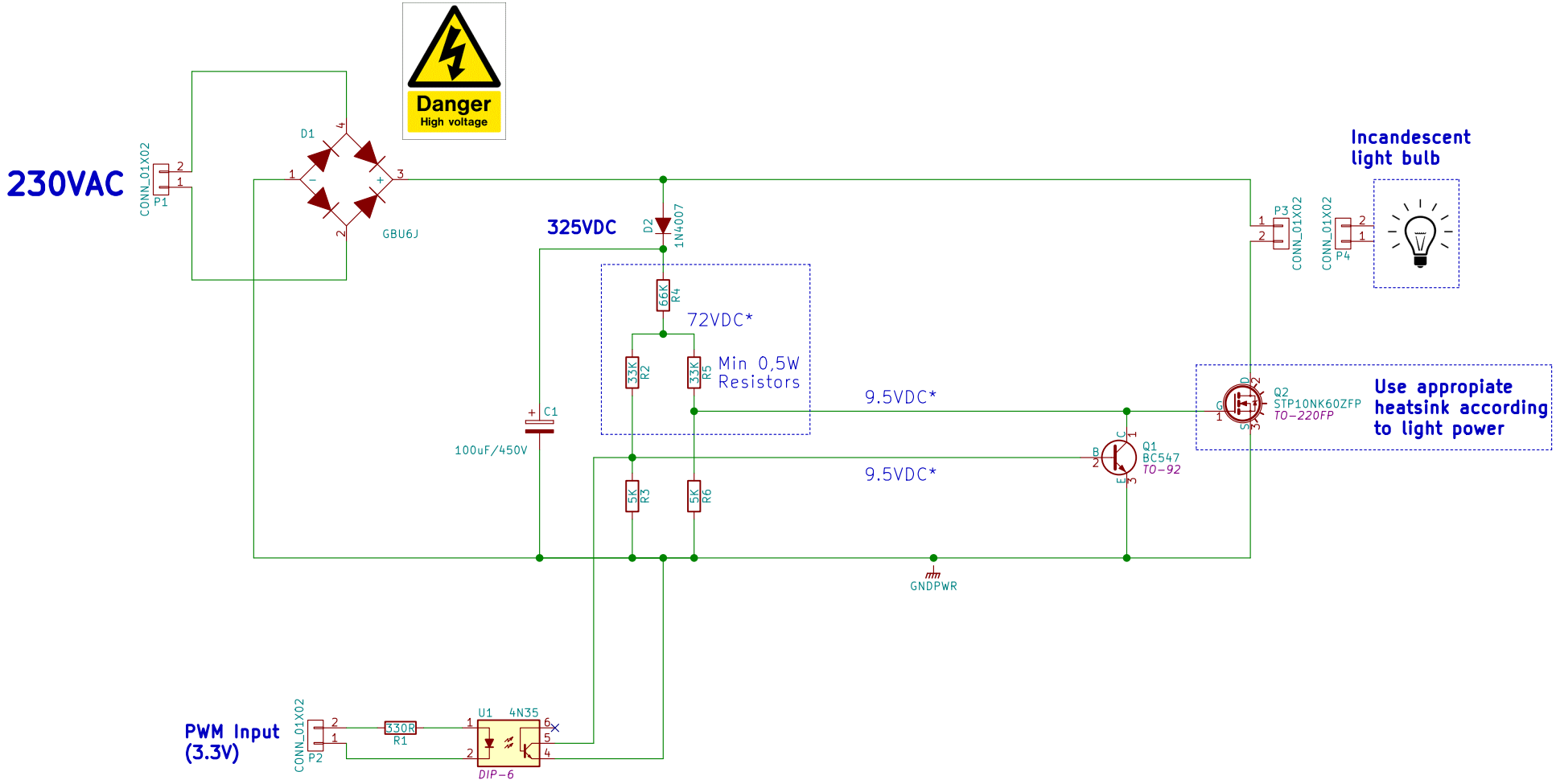

*These values are aproximated. Set PWM Input to fixed 3.3V in order to measure.
Design based on "https://arduinodiy.wordpress.com/2015/07/25/1498/"

By Oscar Sanz

CC BY SA

Sheet: /
File: pwm.mosfet.driver.230vac.sch

Title: pimcw – Incandescent light bulb PWM Driver

Size: A4	Date: 2016-11-01	Rev: A
KiCad E.D.A. eeschema 4.0.3-stable		Id: 1/1