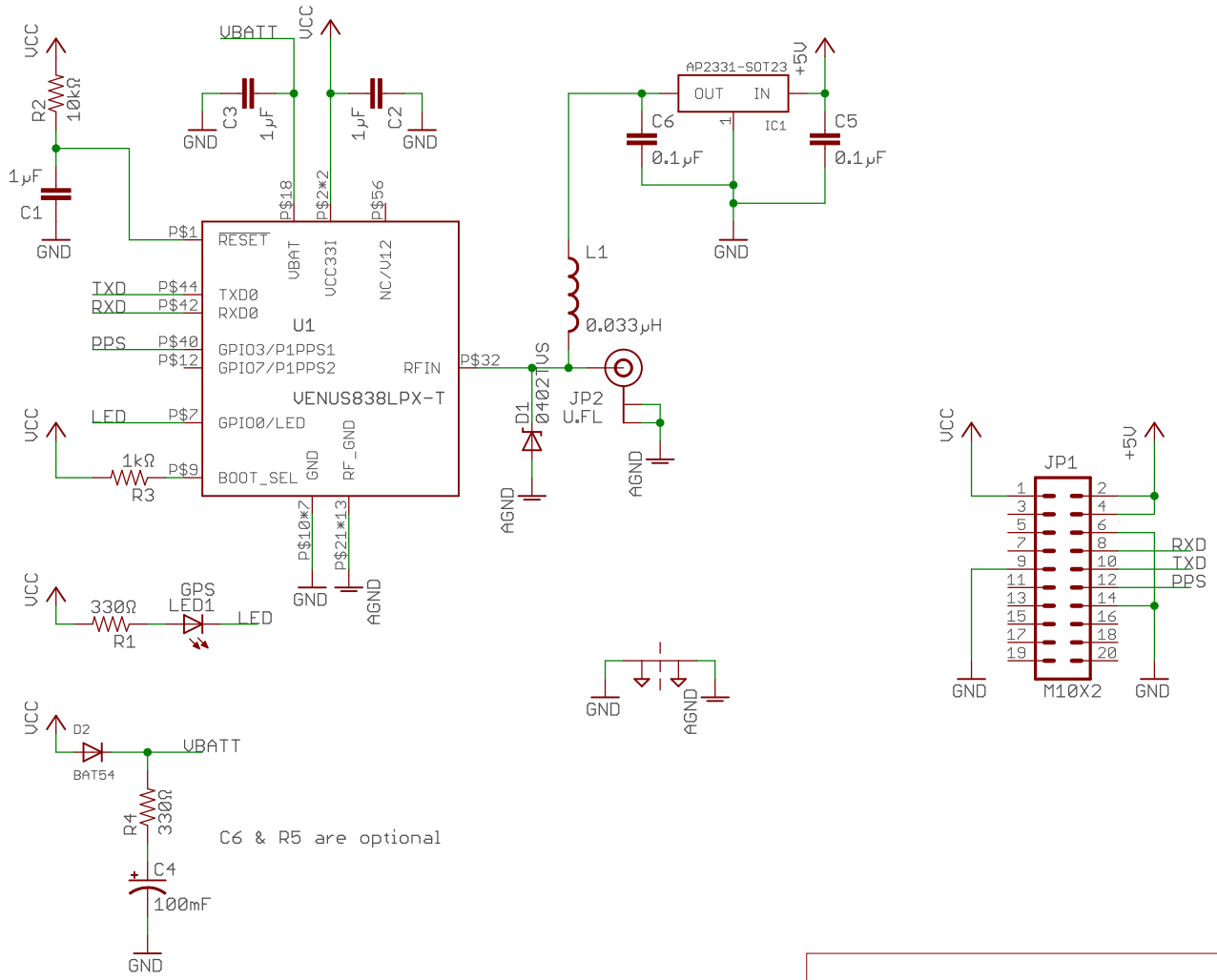

TITLE: GPS_Pi_Hat_0_2

Document Number:

REV:

Date: 6/1/18 8:13 PM

Sheet: 1/1