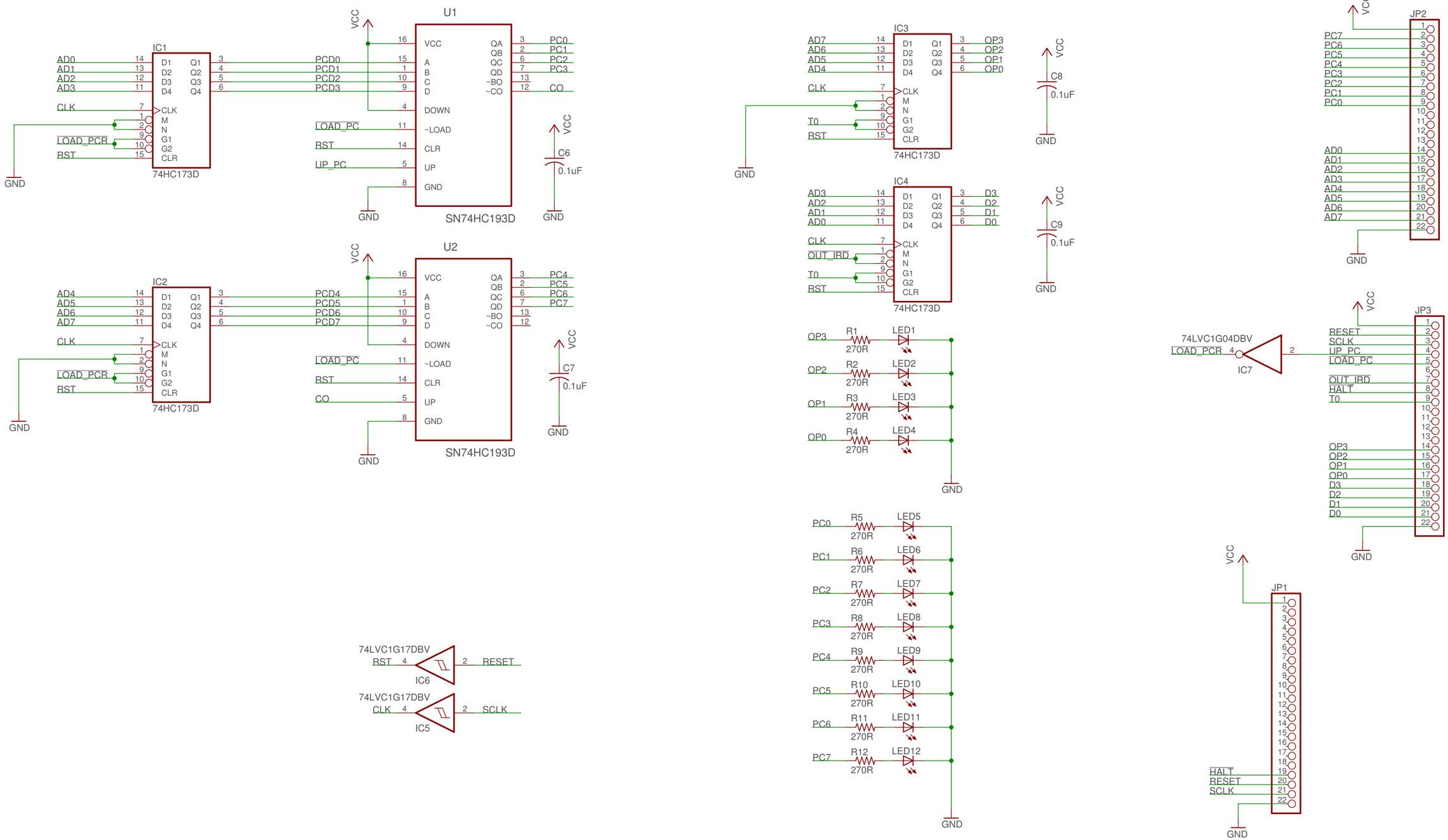


Copyright (C) 2018, David Anders. All Rights Reserved.

TITLE: ddl4-pc-ir

Document Number: Dave's Dev Lab

REV: B

Date: 7/1/18 3:49 PM

Sheet: 1/1