MARK	CONTENT OF AMENDMENT	DATE	DRAW
1	Change wire type,wire length and connector.	2022-02-24	YBM
2	The voltage is changed from 12V to 24V.	2022-03-16	YBM
3	change wire length.	2022-04-08	YBM
4	Rotor wire adding M4 ring terminal.	2022-04-13	YBM

This document is the property of B-COMMAND GmbH. (Hereafter "B-COMMAND"). It is lent an is to be returned upon request. The contents of this document are confidential and constitute trade secrets of proprietary to B-COMMAND. This document nor its contents shall be disclosed to any unauthorized person copied or published without B-COMMAND prior written consent.

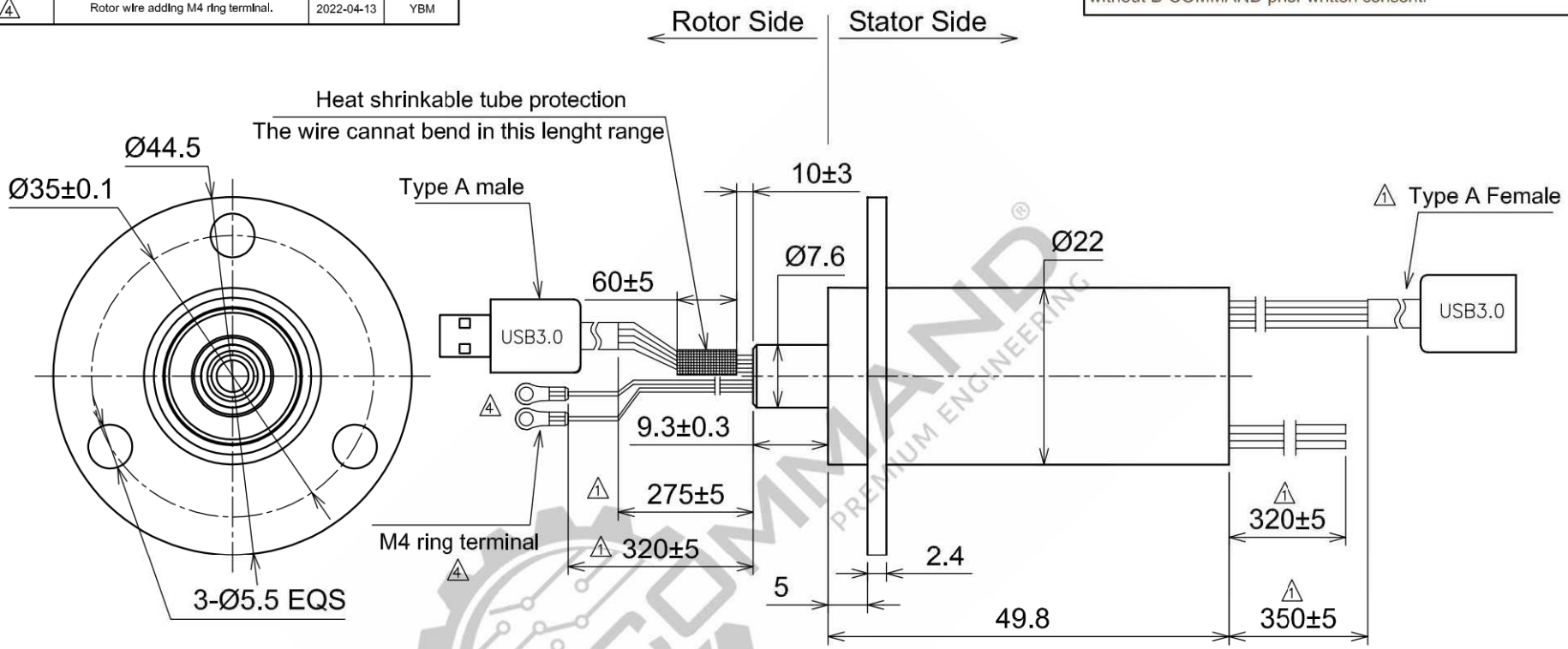

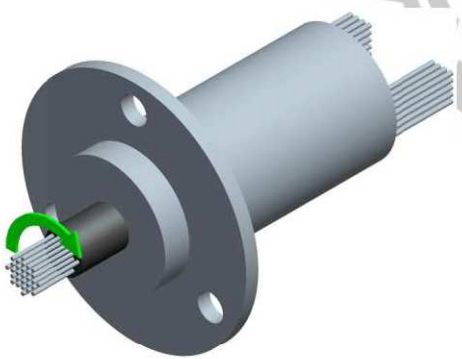

MODEL	RX-USB001-022-02000C03					
Customer code			TITLE	Outline Drawing		
UNIT	mm	TOL UNLESS SPECIFIED LINEAR 0–18 ±0.1 >18–80 ±0.15 >80–250 ±0.2 ANGLE x° ±0.5°	DESIGN	YBM	DATE	2022.04.13
SCALE	1:1		CHECKED	HZ	DATE	2022.04.13
PROJ.			REV.	A4	PAGE	1/2

MARK	CONTENT OF AMENDMENT	DATE	DRAW
1	Change wire type,wire length and connector.	2022-02-24	YBM
2	The voltage is changed from 12V to 24V.	2022-03-16	YBM
3	change wire length.	2022-04-08	YBM
4	Rotor wire adding M4 ring terminal.	2022-04-13	YBM

This document is the property of B-COMMAND GmbH. (Hereafter "B-COMMAND"). It is lent an is to be returned upon request. The contents of this document are confidential and constitute trade secrets of proprietary to B-COMMAND. This document nor its contents shall be disclosed to any unauthorized person copied or published without B-COMMAND prior written consent.

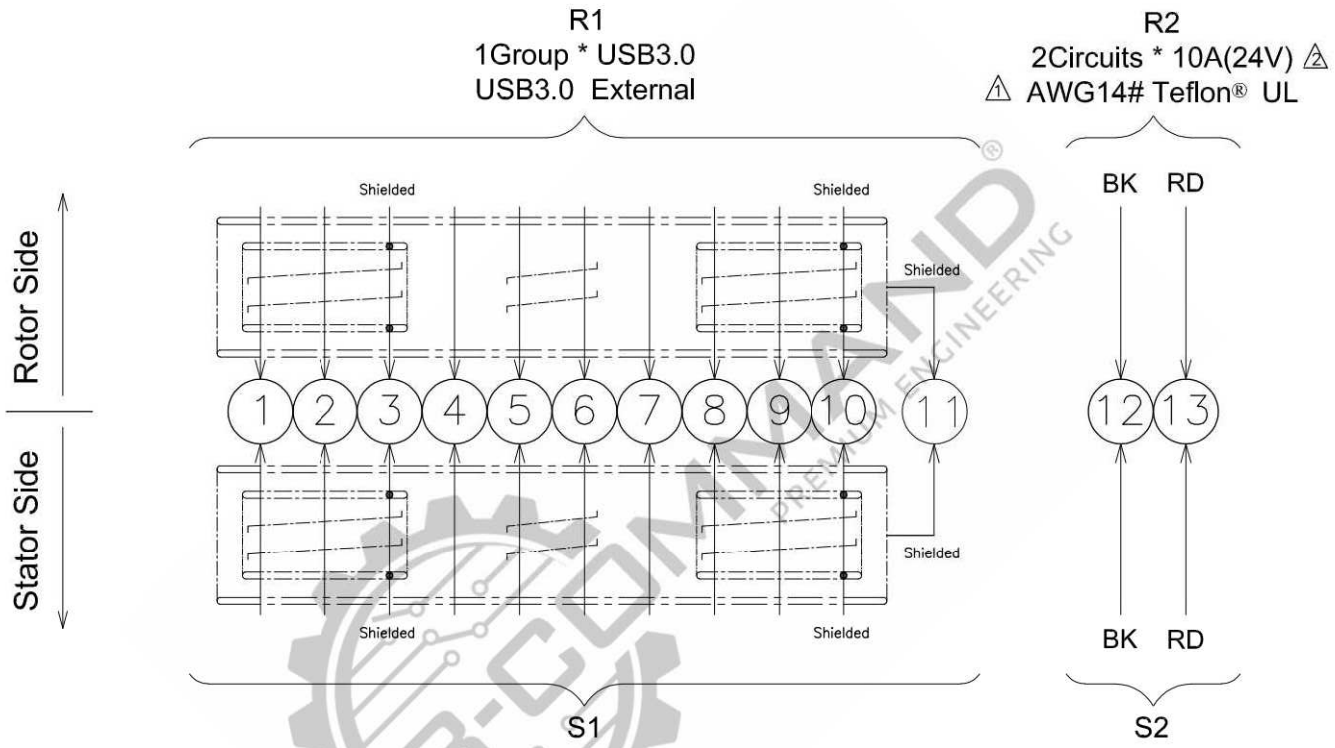

Electronic & Electric		
Circuits	Total	13CKT
	Detail	1Group * USB3.0 / 2Circuits * 10A(24V) 2
Rating Voltage		24V AC/DC 2
Dielectric Strength		≥200VAC@50Hz(P) ≥100VAC@50Hz(S)
Insulation Resistance		≥100MΩ@200VDC(P) ≥10MΩ@100VDC(S)

Mechanical	
Working Speed	0~30rpm
Contact Material	Gold to Gold
Housing Material	Engineering plastics
Lead Wire Length	3 Stator:320±5mm/350±5mm Rotor:275±5mm/320±5mm
Dynamic Resistance Fluctuation Value	≤35mΩ

Environment	
Working Temperature	-20°C~+60°C
Working Humidity	≤60%RH
IP	IP40

Remarks	
Application	/
Service Life	Typ.5 million revolutions(at room temperature) depending on speed,environmental conditions and size.
Note: "P" stands for power, "S" stands for signal.	

MODEL	RX-USB001-022-02000C03					
Customer code			TITLE	Wiring Diagram		
UNIT	mm	TOL UNLESS SPECIFIED LINEAR 0–18 ±0.1 >18–80 ±0.15 >80–250 ±0.2 ANG.E x° ±0.5°	DESIGN	YBM	DATE	2022.04.13
SCALE	1:1		CHECKED	HZ	DATE	2022.04.13
PROJ.			REV.	A4	PAGE	2/2