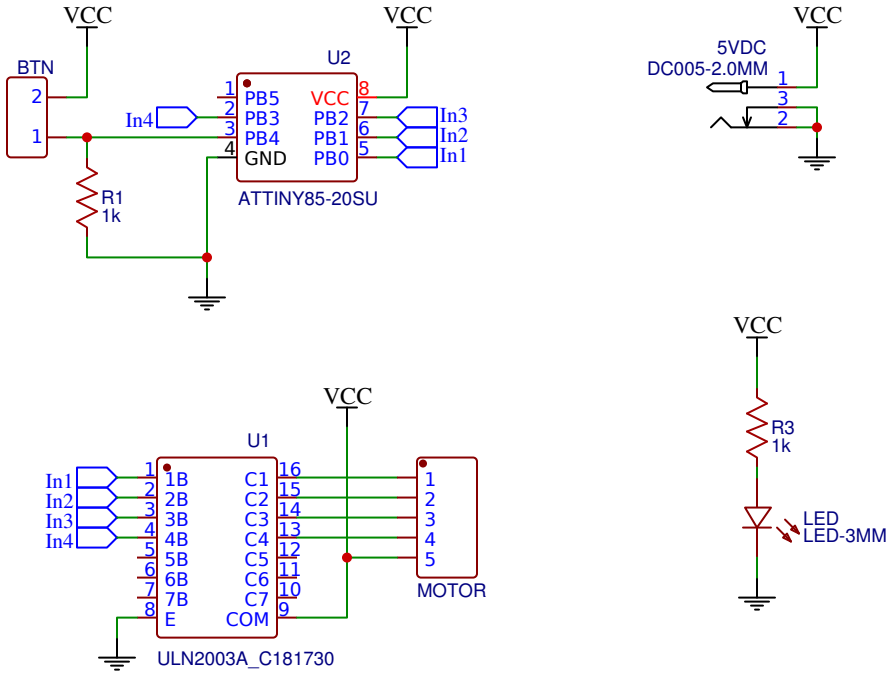

TITLE: Solder Paste Dispenser	REV: 1.2
Date: 2018-08-30	Sheet: 1/1
EasyEDA V5.6.9	Drawn By: LKBrilliant