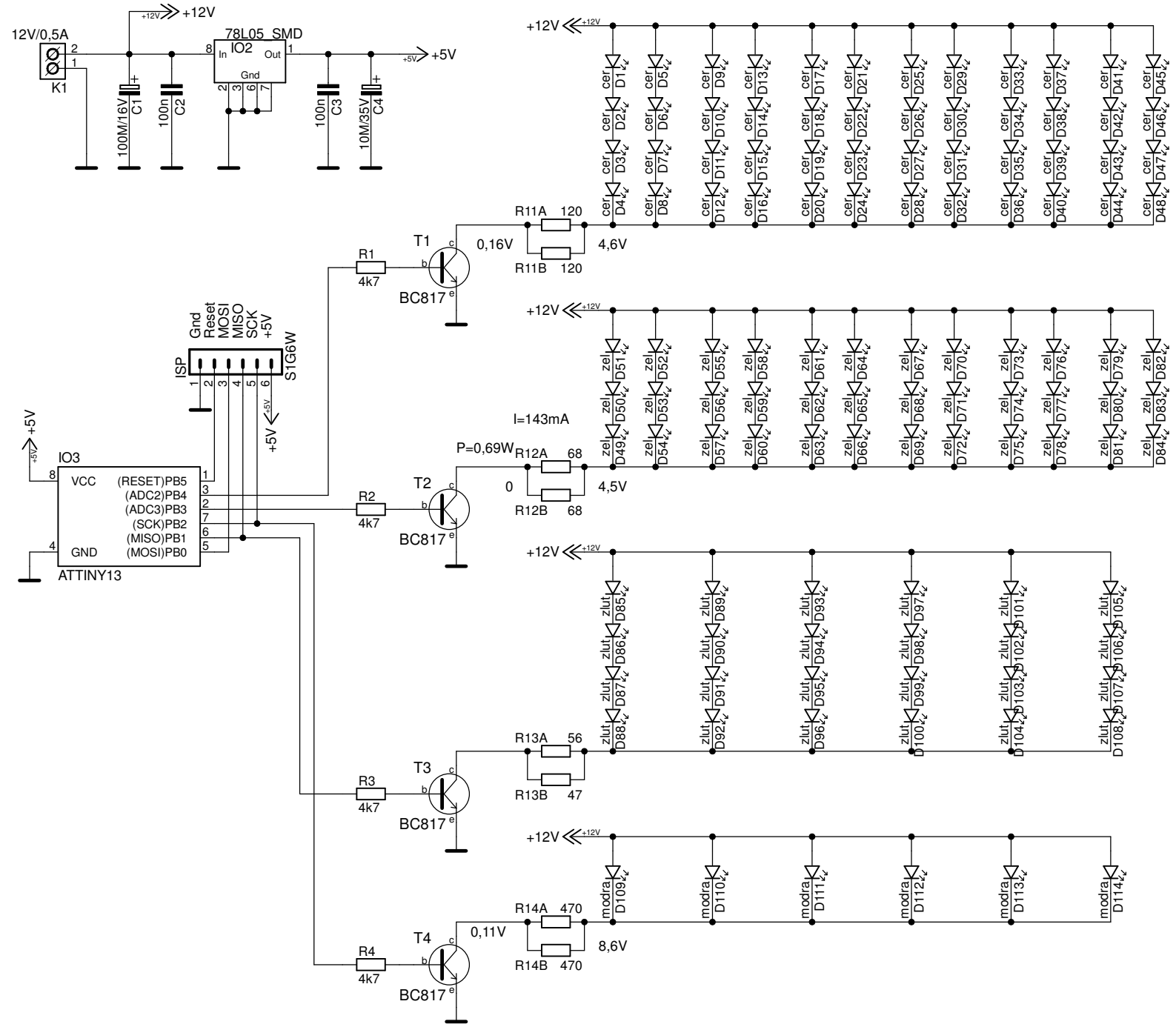
12V/0,5A
K1
+12V
78L05_SMD
IO2
In
Out
Gnd
+5V
100M/16V C1
100n C2
100n C3
10M/35V C4
R11A 120
R11B 120
0,16V
4,6V
T1
BC817
R1 4k7
ISP
Gnd
Reset
MOSI
MISO
SCK
+5V
S1G6W
IO3
VCC
GND
(RESET)PB5
(ADC2)PB4
(ADC3)PB3
(SCK)PB2
(MISO)PB1
(MOSI)PB0
ATTINY13
I=143mA
P=0,69W
R12A 68
R12B 68
0
4,5V
T2
R2 4k7
R13A 56
R13B 47
T3
R3 4k7
R14A 470
R14B 470
0,11V
8,6V
T4
R4 4k7