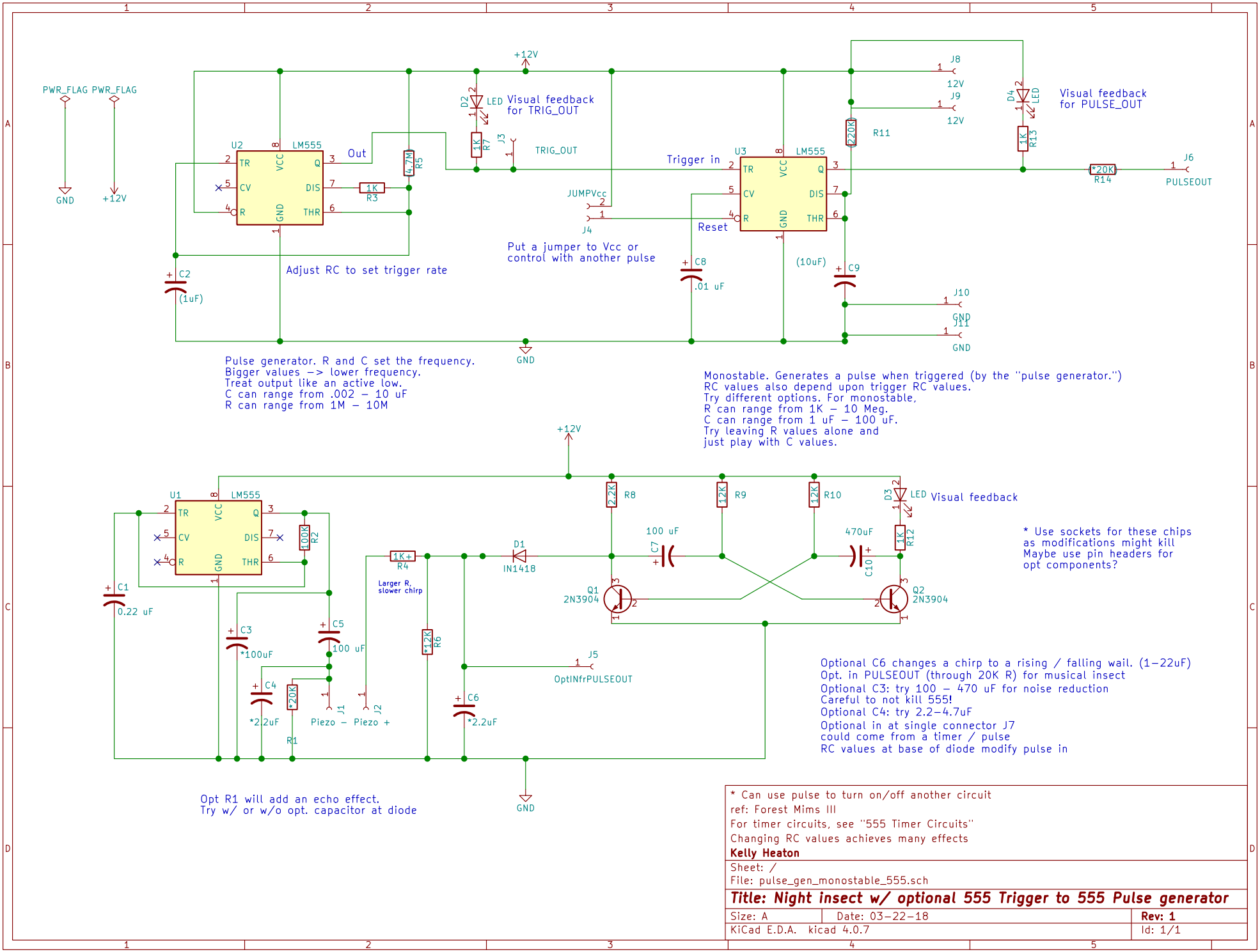

* Can use pulse to turn on/off another circuit
ref: Forest Mims III
For timer circuits, see "555 Timer Circuits"
Changing RC values achieves many effects

Kelly Heaton

Sheet: /
File: pulse_gen_monostable_555.sch

Title: Night insect w/ optional 555 Trigger to 555 Pulse generator

Size: A	Date: 03-22-18	Rev: 1
KiCad E.D.A. kicad 4.0.7		Id: 1/1