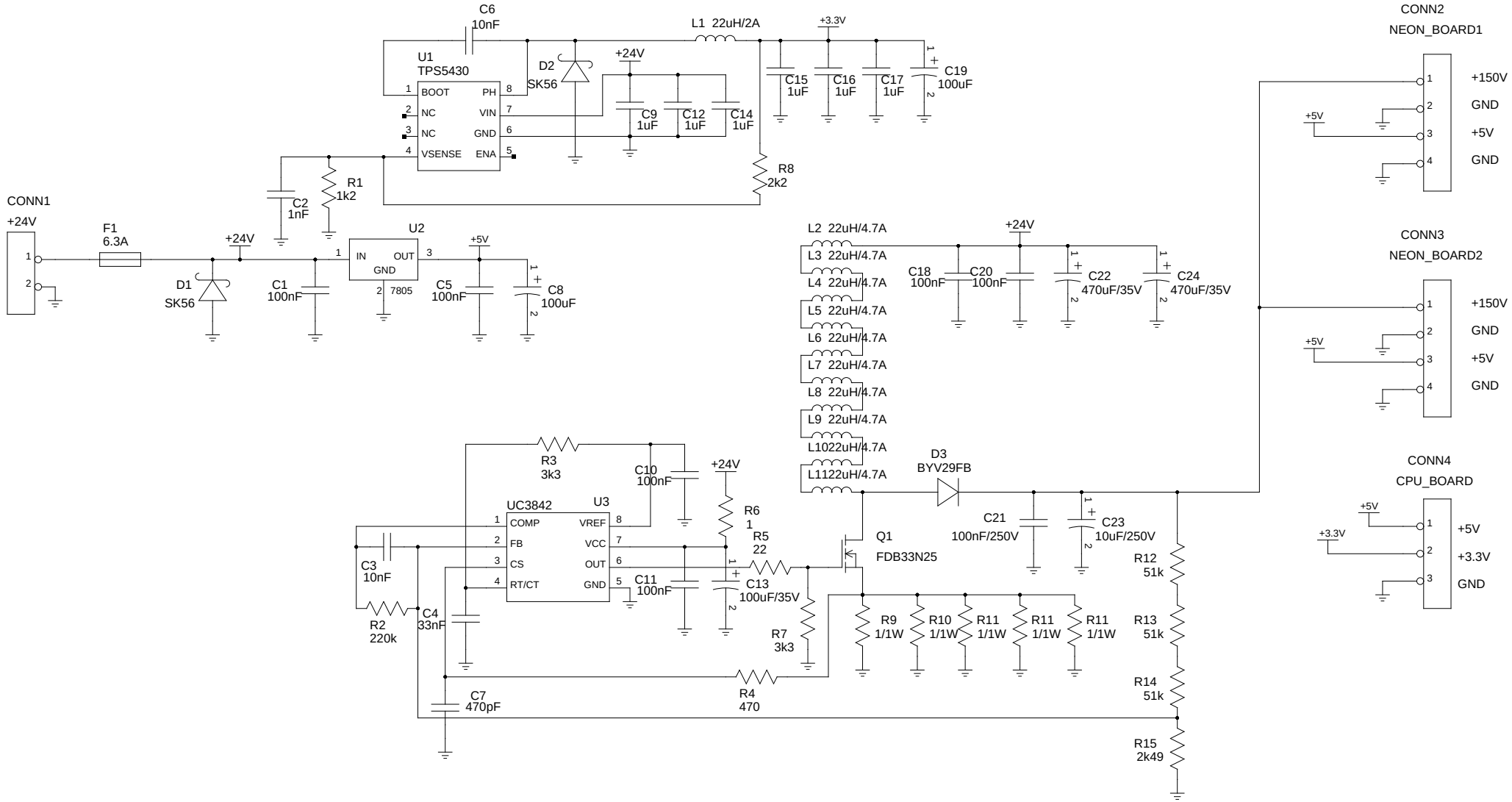
CONN1
+24V
F1
6.3A
D1
SK56
C1
100nF
C2
1nF
R1
1k2
U2
IN
OUT
GND
7805
+5V
C5
100nF
C8
100uF
C6
10nF
U1
TPS5430
BOOT
NC
NC
VSENSE
PH
VIN
GND
ENA
D2
SK56
+24V
C9
1uF
C12
1uF
C14
1uF
L1 22uH/2A
+3.3V
C15
1uF
C16
1uF
C17
1uF
C19
100uF
R8
2k2
L2 22uH/4.7A
L3 22uH/4.7A
L4 22uH/4.7A
L5 22uH/4.7A
L6 22uH/4.7A
L7 22uH/4.7A
L8 22uH/4.7A
L9 22uH/4.7A
L1022uH/4.7A
L1122uH/4.7A
C18
100nF
C20
100nF
C22
470uF/35V
C24
470uF/35V
D3
BYV29FB
C21
100nF/250V
C23
10uF/250V
Q1
FDB33N25
R12
51k
R13
51k
R14
51k
R15
2k49
R3
3k3
C10
100nF
UC3842
U3
COMP
FB
CS
RT/CT
VREF
VCC
OUT
GND
C11
100nF
R6
1
R5
22
C13
100uF/35V
C3
10nF
R2
220k
C4
33nF
C7
470pF
R7
3k3
R4
470
R9
1/1W
R10
1/1W
R11
1/1W
R11
1/1W
R11
1/1W
CONN2
NEON_BOARD1
+150V
GND
+5V
GND
CONN3
NEON_BOARD2
+150V
GND
+5V
GND
CONN4
CPU_BOARD
+5V
+3.3V
GND