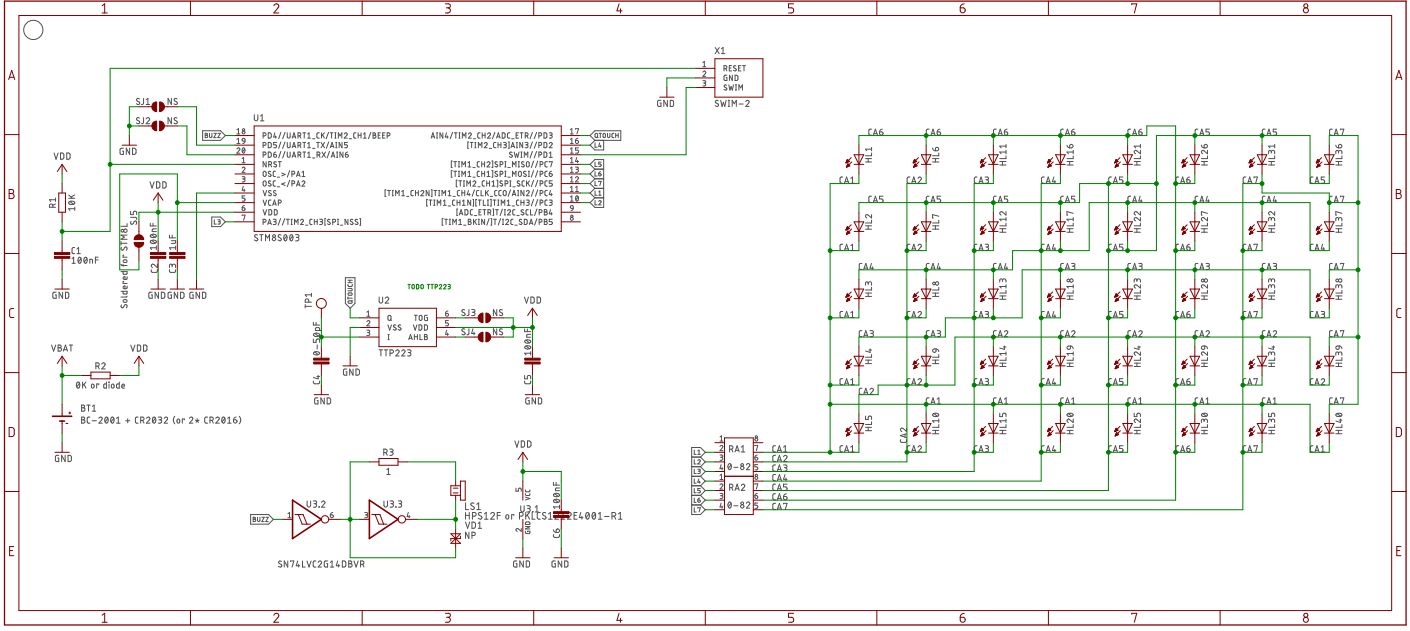
X1
RESET
GND
SWIM
SWIM-2
U1
STM8S003
PD4//UART1_CK/TIM2_CH1/BEEP
PD5//UART1_TX/AIN5
PD6//UART1_RX/AIN6
NRST
OSC_>/PA1
OSC_</PA2
VSS
VCAP
VDD
PA3//TIM2_CH3[SPI_NSS]
AIN4/TIM2_CH2/ADC_ETR//PD3
[TIM2_CH3]AIN3//PD2
SWIM//PD1
[TIM1_CH2]SPI_MISO//PC7
[TIM1_CH1]SPI_MOSI//PC6
[TIM2_CH1]SPI_SCK//PC5
[TIM1_CH2N]TIM1_CH4/CLK_CCO/AIN2//PC4
[TIM1_CH1N][TLI]TIM1_CH3//PC3
[ADC_ETR]T/I2C_SCL/PB4
[TIM1_BKIN/]T/I2C_SDA/PB5
SJ1
SJ2
SJ5
SJ3
SJ4
NS
BUZZ
QTOUCH
L1
L2
L3
L4
L5
L6
L7
VDD
GND
R1
10K
C1
100nF
C2
100nF
C3
1uF
Soldered(for STM8L)
TP1
QTOUCH
U2
TTP223
TODO TTP223
Q
TOG
VSS
VDD
I
AHLB
C4
10-50pF
C5
100nF
VBAT
R2
0K or diode
BT1
BC-2001 + CR2032 (or 2* CR2016)
R3
1
U3.2
U3.3
U3.1
SN74LVC2G14DBVR
LS1
HPS12F or PKLCS1212E4001-R1
VD1
NP
C6
100nF
RA1
RA2
0-82
CA1
CA2
CA3
CA4
CA5
CA6
CA7
HL1
HL2
HL3
HL4
HL5
HL6
HL7
HL8
HL9
HL10
HL11
HL12
HL13
HL14
HL15
HL16
HL17
HL18
HL19
HL20
HL21
HL22
HL23
HL24
HL25
HL26
HL27
HL28
HL29
HL30
HL31
HL32
HL33
HL34
HL35
HL36
HL37
HL38
HL39
HL40