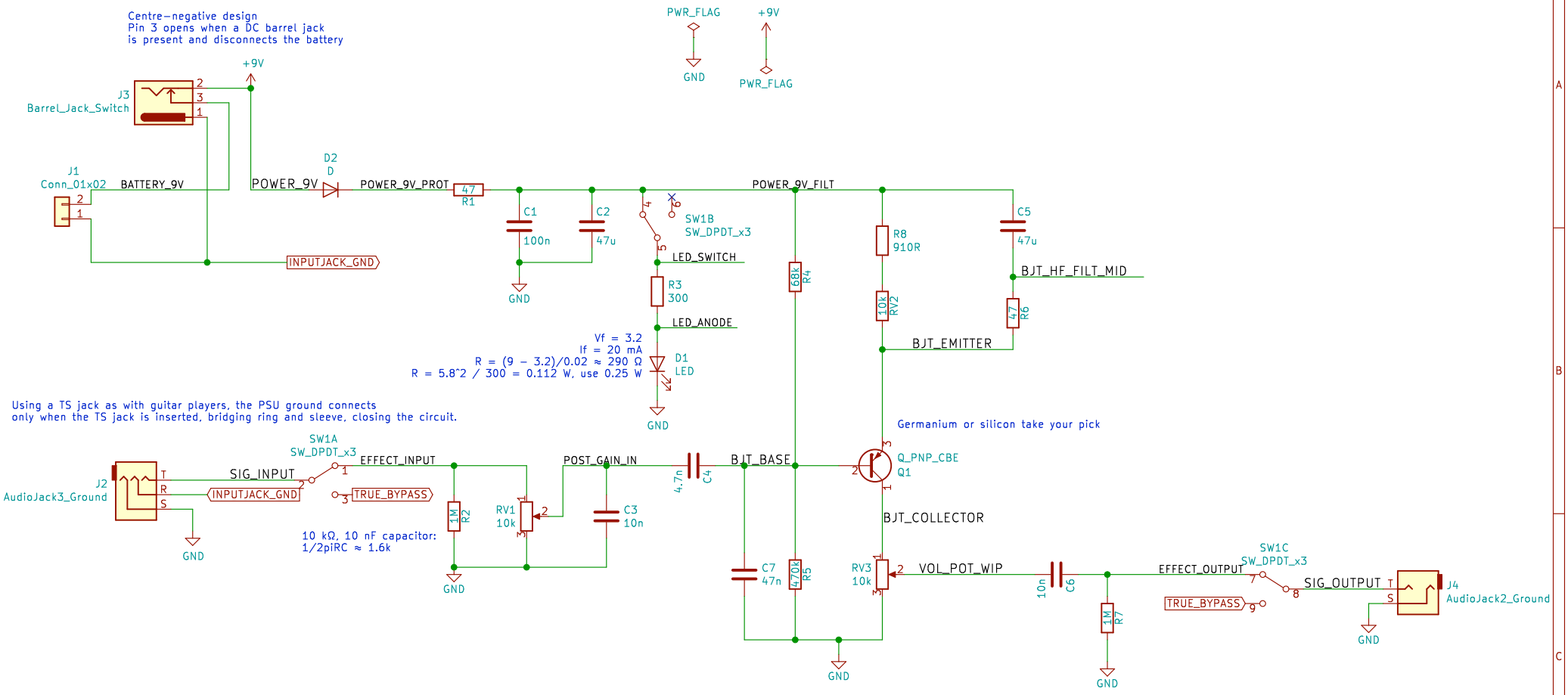

Revision 2 notes:
- Corrected capacitor footprint sizes:
  - C2, C5 0805 -> 1210
  - C4 0805 -> 1206

Boost LED resistor power handling
- R3 0.1W -> 0.25W
- R3 3k -> 180 Ω

Added dedicated 9V battery snap J1

Added switching DC barrel jack J3 which disconnects battery

Used ring of J2 audio jack to connect ground and enable device.

Added D2, dedicated reverse polarity diode

Added R8 as minimum resistance to prevent RV2 from burning out (precautionary, not likely).

Q1 package from narrow to wide.

Guitar version:
- C4 = 4n7
- C6 = 10n
- C7 = nostuff
- C3 = 10n

Bass version (experimental)
- C4 = 1u
- C6 = 1u
- C3 = 47n
- C7 = 47n

C4 and C6 need to be both 0805 and 1210 to accomodate
C3 needs to be both 0805 and 1206

True Bypass
Two controls, gain before the CE amplifier, volume at the output.
PNP design for positive 9V

Sheet: /
File: treble-booster.sch

Title: Treble Booster Pedal

Size: A4	Date: 2019-02-06	**Rev: 0.1**
KiCad E.D.A. kicad (5.0.1-3-g963ef8bb5)		Id: 1/1