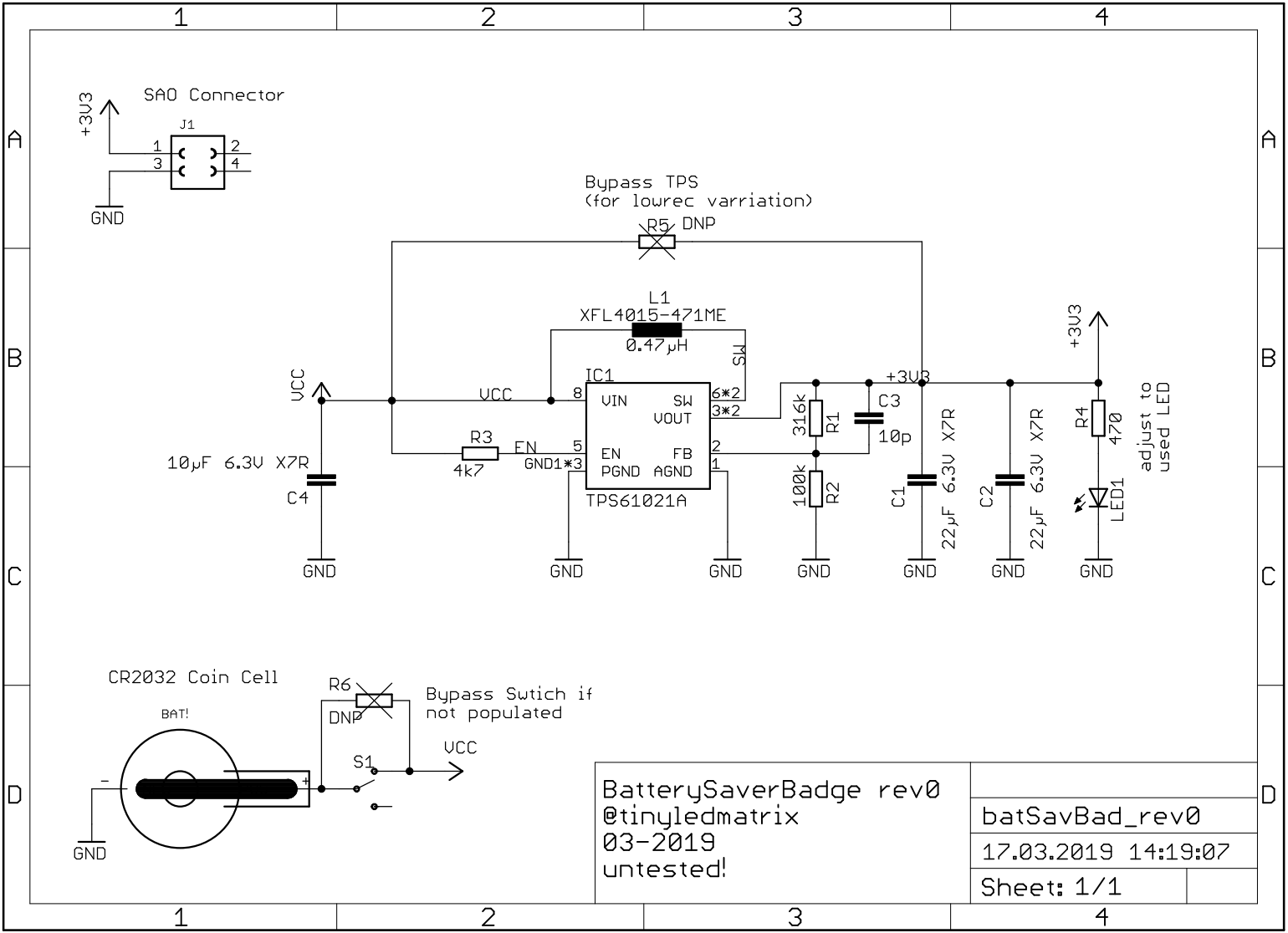
SAO Connector
J1
+3V3
GND
Bypass TPS
(for lowrec varriation)
R5 DNP
L1
XFL4015-471ME
0.47µH
SW
IC1
VIN
SW
VOUT
EN
FB
PGND
AGND
TPS61021A
VCC
R3
4k7
EN
GND1
10µF 6.3V X7R
C4
316k
R1
100k
R2
C3
10p
C1
22µF 6.3V X7R
C2
22µF 6.3V X7R
R4
470
LED1
adjust to used LED
CR2032 Coin Cell
BAT!
R6
DNP
Bypass Swtich if not populated
S1
BatterySaverBadge rev0
@tinyledmatrix
03-2019
untested!
batSavBad_rev0
17.03.2019 14:19:07
Sheet: 1/1