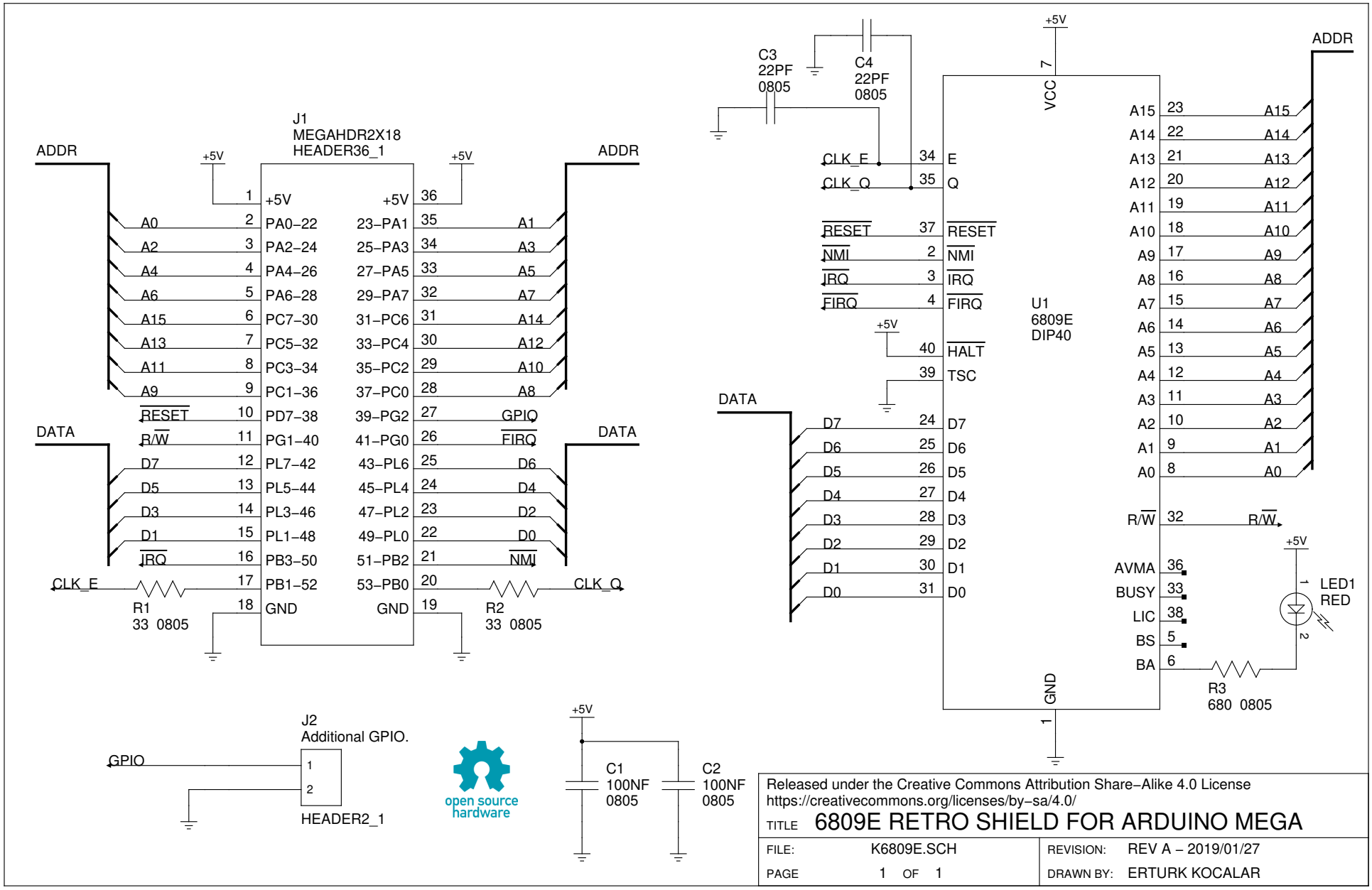


Released under the Creative Commons Attribution Share–Alike 4.0 License
https://creativecommons.org/licenses/by–sa/4.0/

TITLE 6809E RETRO SHIELD FOR ARDUINO MEGA

| | | | |
|---|---|---|---|
| FILE: | K6809E.SCH | REVISION: | REV A – 2019/01/27 |
| PAGE | 1 OF 1 | DRAWN BY: | ERTURK KOCALAR |