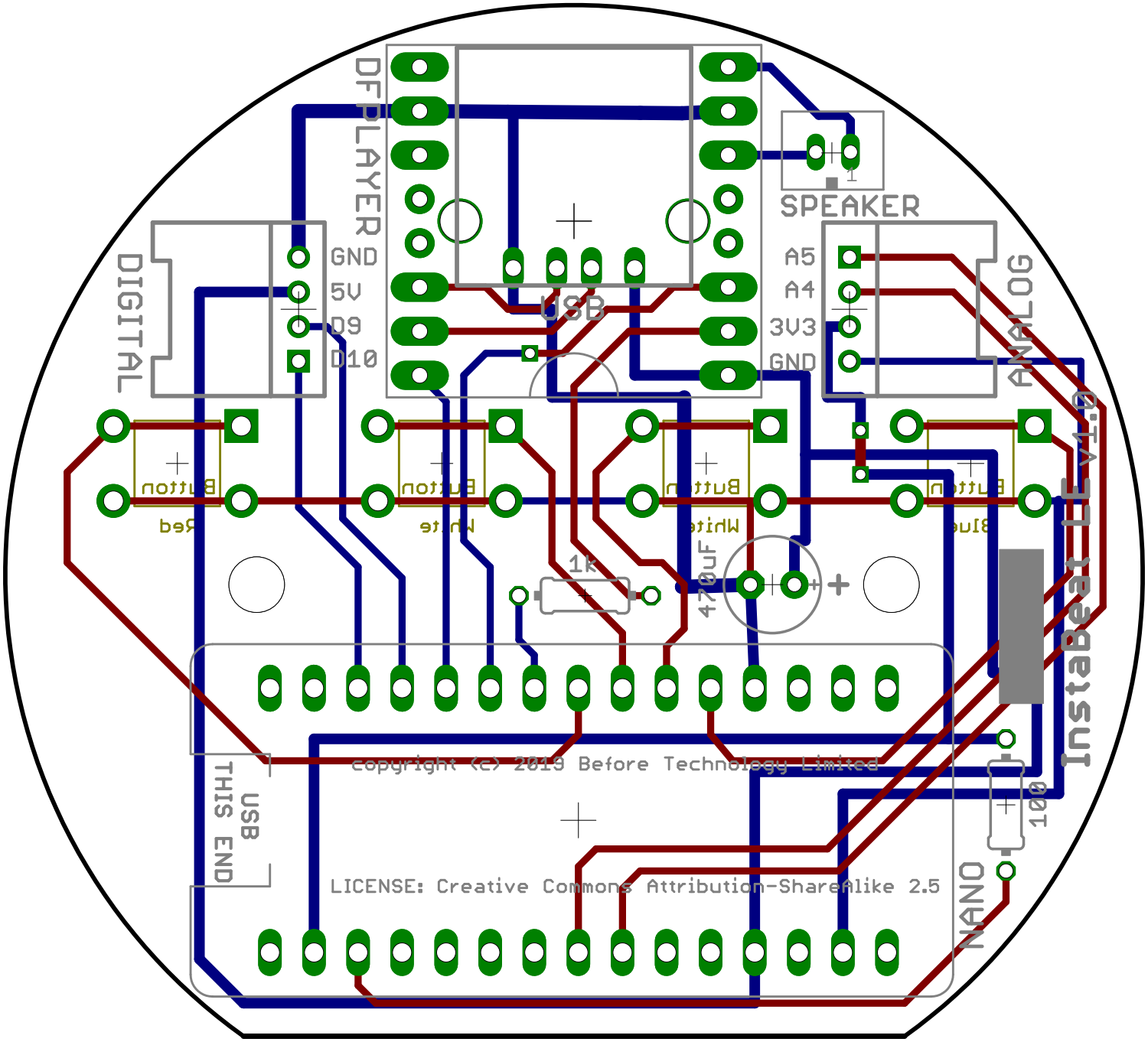
DFPLAYER
SPEAKER
DIGITAL
GND
5V
D9
D10
USB
A5
A4
3V3
GND
ANALOG
Button
Red
Button
White
Button
White
Button
Blue
1k
470uF
InstaBeat DF v1.0
copyright (c) 2019 Before Technology Limited
USB
THIS END
LICENSE: Creative Commons Attribution-ShareAlike 2.5
NANO
100