US005592058A

# United States Patent [19]

Archer et al.

[11] Patent Number: 5,592,058

[45] Date of Patent: Jan. 7, 1997

[54] **CONTROL SYSTEM AND METHODS FOR A MULTIPARAMETER ELECTRONICALLY COMMUTATED MOTOR**

[75] Inventors: **William R. Archer**; **Roger C. Becerra**; **Brian L. Beifus**; **Mark A. Brattoli**, all of Fort Wayne; **Rajendra K. Shah**, Indianapolis, all of Ind.

[73] Assignee: **General Electric Company**, Fort Wayne, Ind.

[21] Appl. No.: **889,708**

[22] Filed: **May 27, 1992**

[51] **Int. Cl.**[6] ..... **H52P 7/00**

[52] **U.S. Cl.** ..... **318/254**; 388/904; 62/157

[58] **Field of Search** ..... 378/254, 138, 378/439, 798–812, 432, 434; 361/23, 29, 30, 31, 33, 90, 92, 79; 388/804, 811, 819, 904, 907.5, 930; 62/126, 129, 154, 155, 157, 158, 159, 228.1, 228.4

[56] **References Cited**

U.S. PATENT DOCUMENTS

| | | | |
|---|---|---|---|
| 4,015,182 | 3/1977 | Erdman | 318/334 |
| 4,250,544 | 2/1981 | Alley | 364/110 |
| 4,346,434 | 8/1982 | Morinaga | 364/183 |
| 4,390,826 | 6/1983 | Erdman et al. | 318/439 |
| 4,415,844 | 11/1983 | Mendenhall et al. | 318/254 |
| 4,459,519 | 7/1984 | Erdman | 318/254 |
| 4,495,450 | 1/1985 | Tokizaki et al. | 318/138 |
| 4,500,821 | 2/1985 | Bitting et al. | 318/254 |
| 4,540,921 | 9/1985 | Boyd, Jr. et al. | 318/254 |
| 4,636,936 | 1/1987 | Boyd, Jr. et al. | 364/148 |
| 4,638,233 | 1/1987 | Erdman | 318/644 |
| 4,642,536 | 2/1987 | Boyd, Jr. et al. | 318/254 |
| 4,642,537 | 2/1987 | Young | 318/254 |
| 4,648,551 | 3/1987 | Thompson et al. | 236/49 |
| 4,653,285 | 3/1987 | Pohl | 361/29 |
| 4,667,480 | 5/1987 | Bessler | 62/180 |
| 4,669,040 | 5/1987 | Pettit et al. | 318/610 X |
| 4,688,547 | 8/1987 | Ballard et al. | 126/116 A |
| 4,712,050 | 12/1987 | Nagasawa et al. | 318/254 |
| 4,722,018 | 1/1988 | Pohl | 361/29 |
| 4,736,143 | 4/1988 | Nakamura et al. | 318/432 |
| 4,743,815 | 5/1988 | Gee et al. | 318/254 |
| 4,754,405 | 6/1988 | Foster | 364/557 |
| 4,860,231 | 8/1989 | Ballard et al. | 364/571 |
| 4,868,467 | 9/1989 | Davis | 318/254 |
| 4,879,502 | 11/1989 | Endo et al. | 318/808 |
| 4,902,952 | 2/1990 | Lavery | 318/645 |
| 4,950,918 | 8/1990 | O'Breartuin et al. | 307/242 |
| 4,992,715 | 2/1991 | Nakamura et al. | 318/432 X |
| 5,019,757 | 5/1991 | Beifus | 318/254 |
| 5,107,685 | 4/1992 | Kobayashi | 318/807 |
| 5,119,071 | 6/1992 | Takezawa et al. | 318/811 |
| 5,170,344 | 12/1992 | Berton et al. | 364/400 |
| 5,202,951 | 4/1993 | Doyle | 388/811 |

FOREIGN PATENT DOCUMENTS

| | | |
|---|---|---|
| 0198248 | 3/1986 | European Pat. Off. . |
| 0401818 | 6/1990 | European Pat. Off. . |
| 2561179 | 2/1985 | France . |
| 2079979 | 6/1981 | United Kingdom . |
| 2202063 | 3/1988 | United Kingdom . |
| 91/17491 | 5/1991 | WIPO . |
| 92/00492 | 7/1991 | WIPO . |

OTHER PUBLICATIONS

Dominique Pouilloux, "Full–wave Sensorless Drive ICs for Brushless DC Motors," Electronic Components and Applications, 1990, vol. 10, No. 1.

*Primary Examiner*—Jonathan Wysocki
*Attorney, Agent, or Firm*—Ralph E. Krisher, Jr.

[57] **ABSTRACT**

A system which drives a component of a heating, ventilating, and/or air conditioning (HVAC) system in response to a system control signal such as a temperature signal provided by a thermostat. The system includes a motor having a stationary assembly and a rotatable assembly. The rotatable assembly is in magnetic coupling relation to the stationary assembly and is in driving relation to the component. The motor drives the component in response to a control signal generated by a microprocessor. The microprocessor is responsive to parameters representative of the system and to the system control signal. The parameters are stored in a memory and are defined in response to a parameter select signal. The control signal provided by the microprocessor controls the speed and torque of the motor. The system further includes an instruction memory for storing instructions controlling the operation of the microprocessor.

**74 Claims, 21 Drawing Sheets**

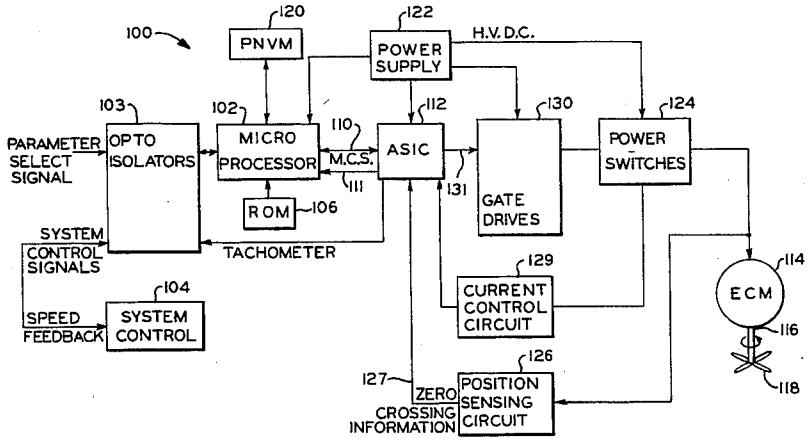

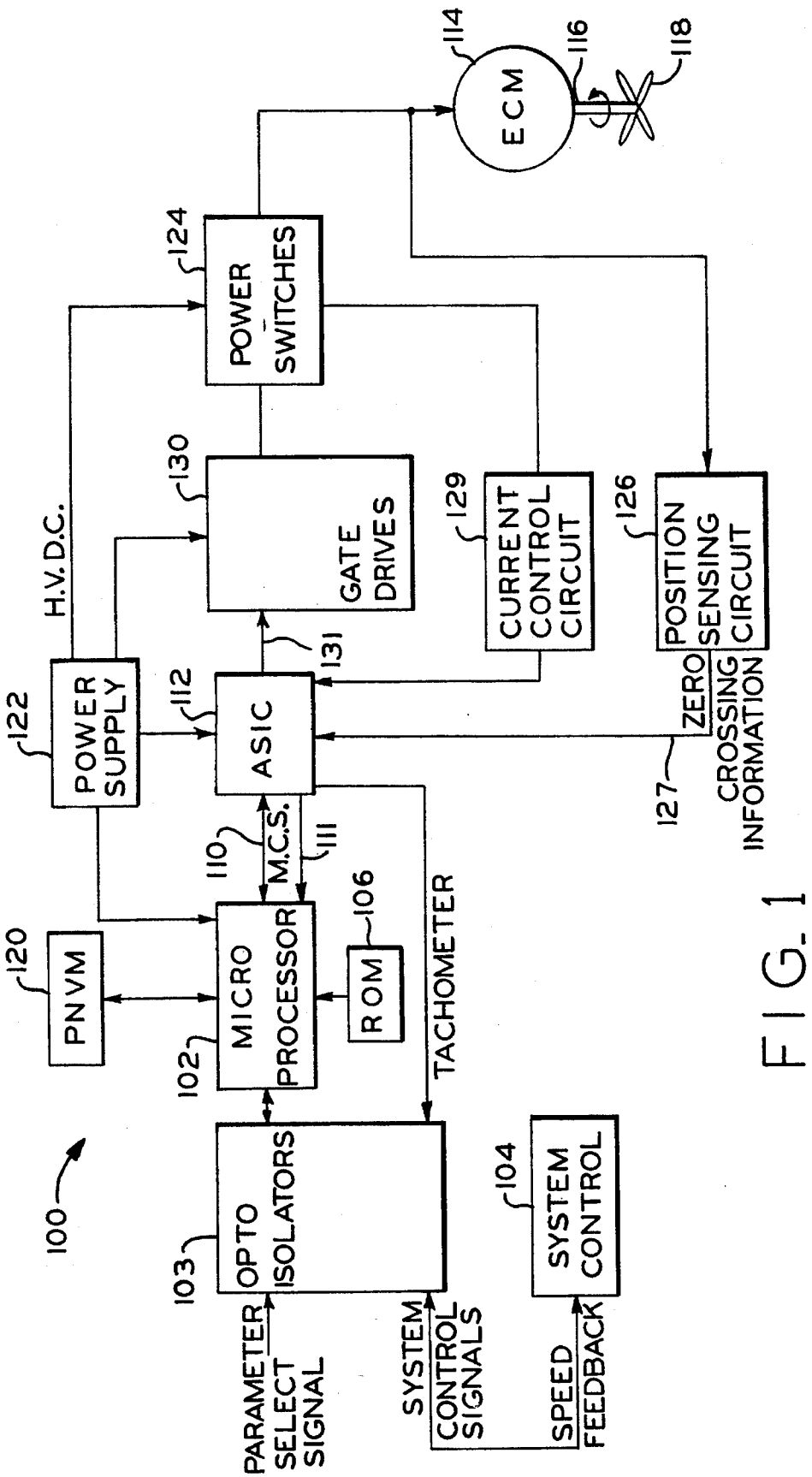
ECM
114
116
118
POWER SWITCHES
124
GATE DRIVES
130
CURRENT CONTROL CIRCUIT
129
POSITION SENSING CIRCUIT
126
H.V.D.C.
POWER SUPPLY
122
ASIC
112
131
ZERO CROSSING INFORMATION
127
M.C.S.
110
111
PNVM
120
MICRO PROCESSOR
102
ROM
106
TACHOMETER
OPTO ISOLATORS
103
SYSTEM CONTROL
104
100
PARAMETER SELECT SIGNAL
SYSTEM CONTROL SIGNALS
SPEED FEEDBACK

FIG. 1

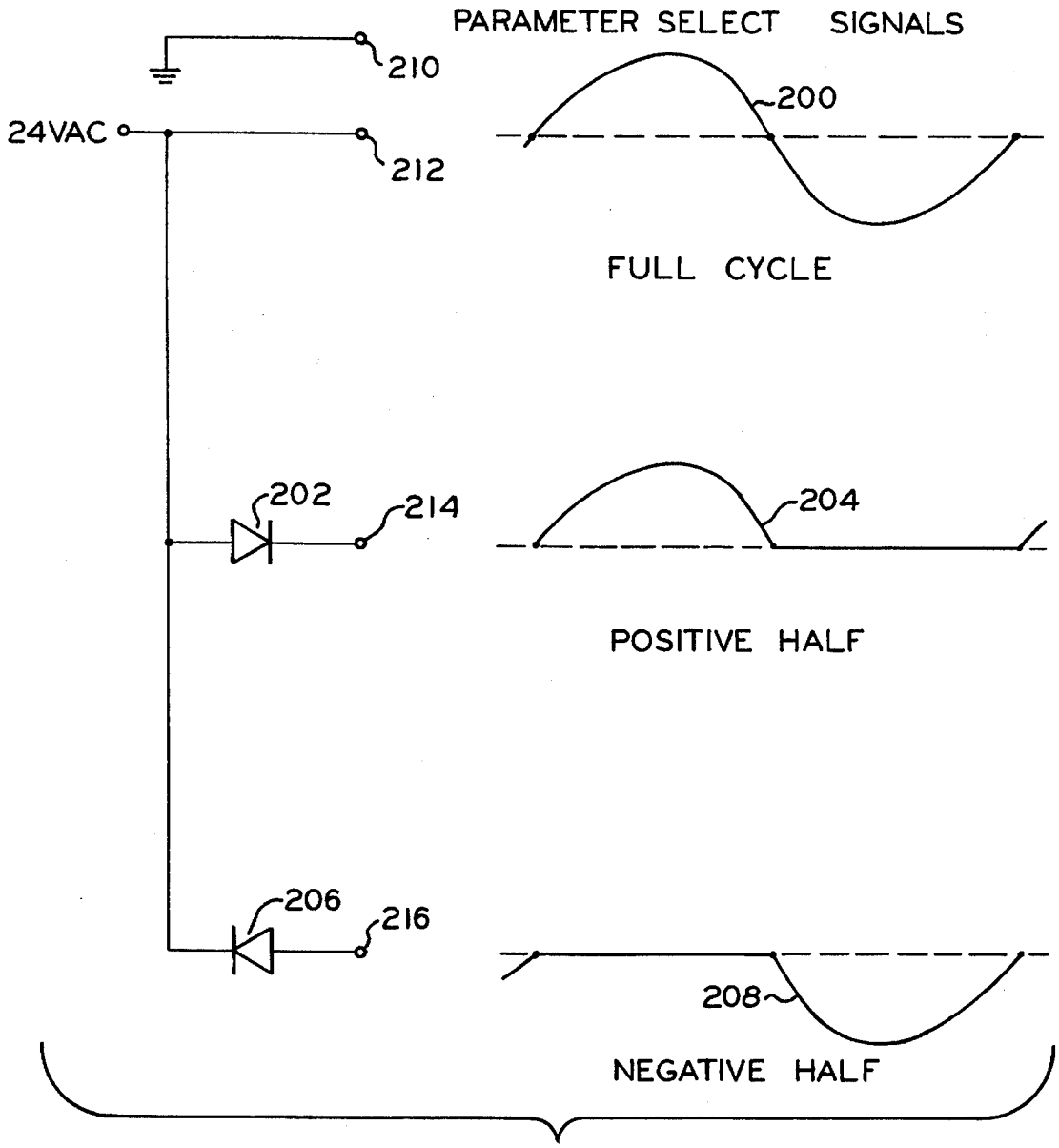
PARAMETER SELECT SIGNALS
210
24VAC
212
200
FULL CYCLE
202
214
204
POSITIVE HALF
206
216
208
NEGATIVE HALF

FIG. 2

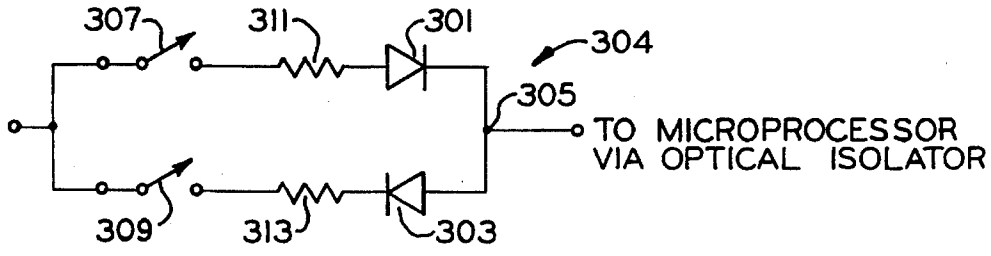
307
311
301
304
305
TO MICROPROCESSOR
VIA OPTICAL ISOLATOR
309
313
303

FIG. 3

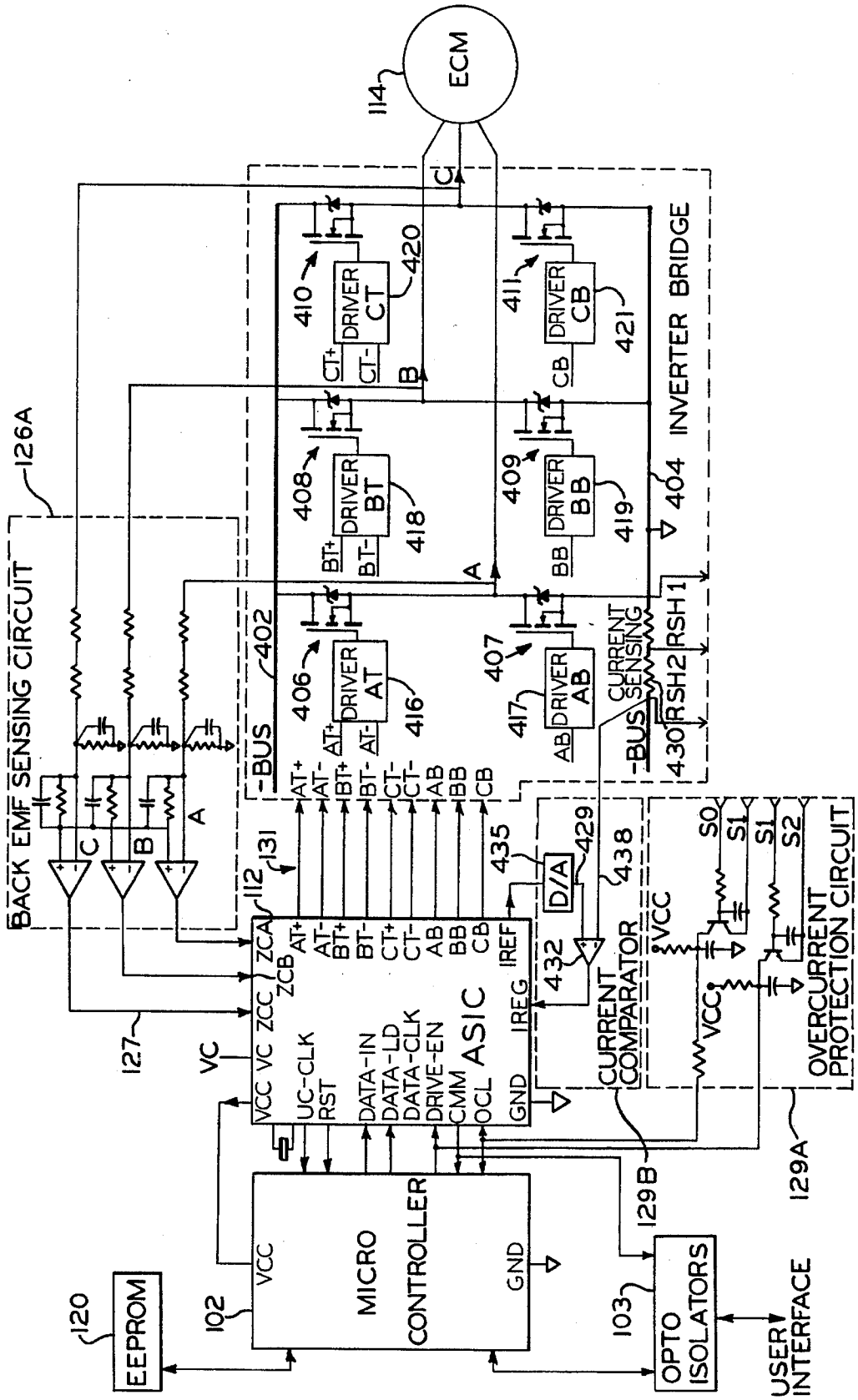
ECM
114
INVERTER BRIDGE
DRIVER CT
DRIVER CB
DRIVER BT
DRIVER BB
DRIVER AT
DRIVER AB
CURRENT SENSING
RSH1
RSH2
-BUS
BACK EMF SENSING CIRCUIT
126A
ASIC
MICRO CONTROLLER
EEPROM
OPTO ISOLATORS
USER INTERFACE
CURRENT COMPARATOR
OVERCURRENT PROTECTION CIRCUIT
D/A
VCC
GND
UC-CLK
RST
DATA-IN
DATA-LD
DATA-CLK
DRIVE-EN
CMM
OCL
IREF
IREG
ZCA
ZCB
ZCC
VC
S0
S1
S2
102
103
112
120
127
129A
129B
131
402
404
406
407
408
409
410
411
416
417
418
419
420
421
429
430
432
435
438

FIG. 4

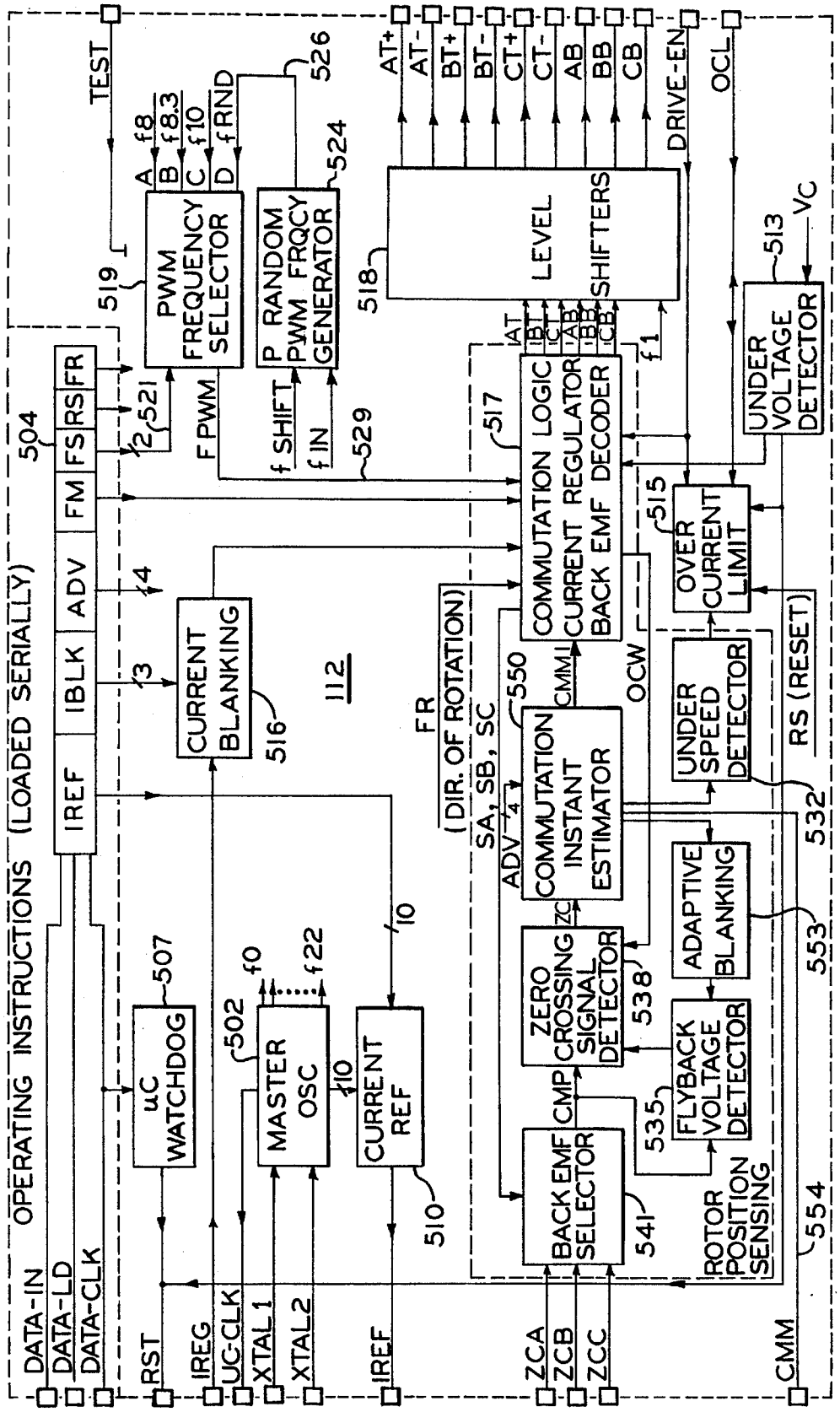


FIG. 5
BLOCK DIAGRAM OF THE ASIC

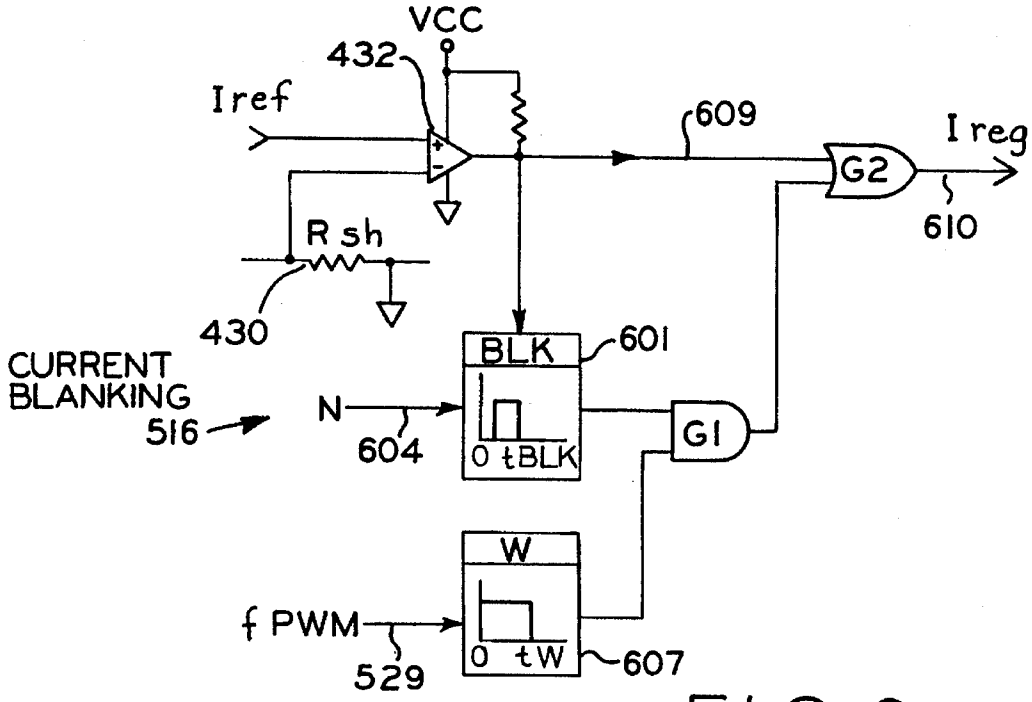
VCC
432
Iref
609
I reg
G2
610
R sh
430
CURRENT
BLANKING
516
N
604
BLK
601
0 tBLK
G1
W
f PWM
529
0 tW
607

FIG_6

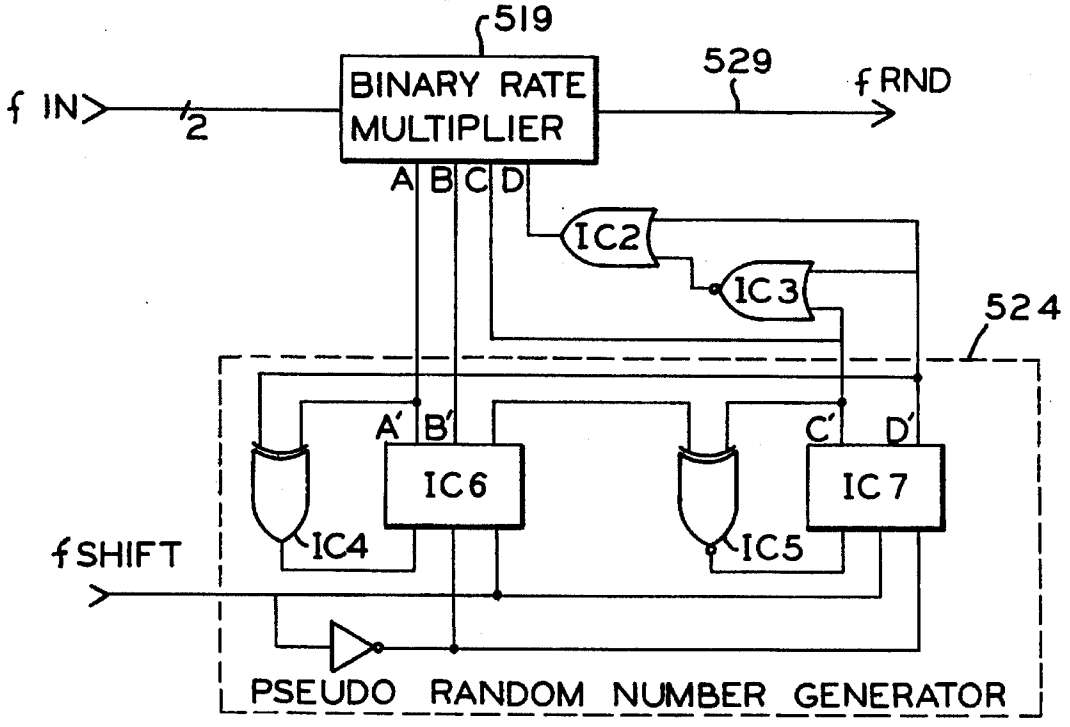
519
f IN
/2
BINARY RATE
MULTIPLIER
529
f RND
A B C D
IC2
IC3
524
A' B'
C' D'
IC6
IC7
IC4
IC5
f SHIFT
PSEUDO RANDOM NUMBER GENERATOR

FIG_8

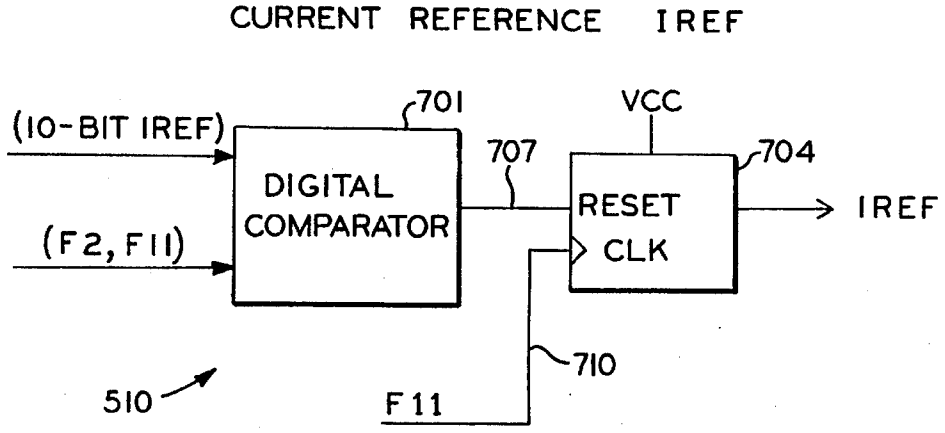


FIG_7

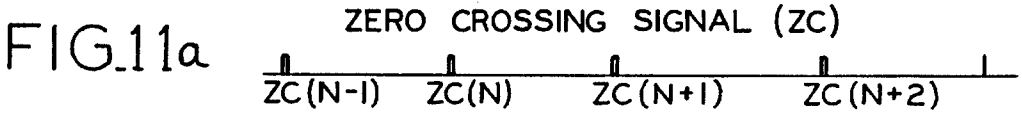


FIG_11a

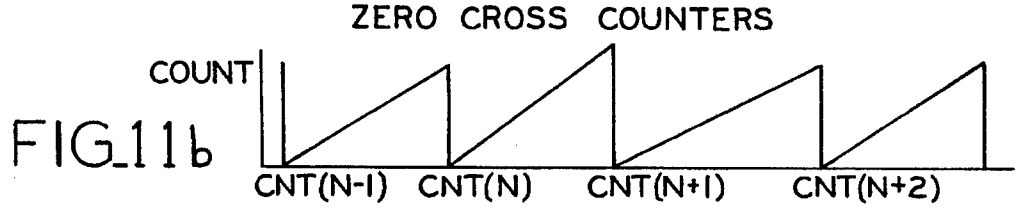


FIG_11b

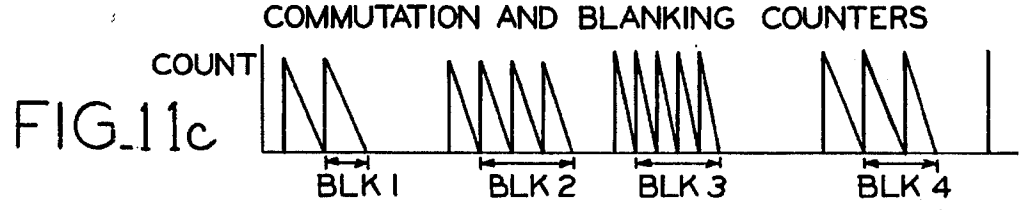


FIG_11c

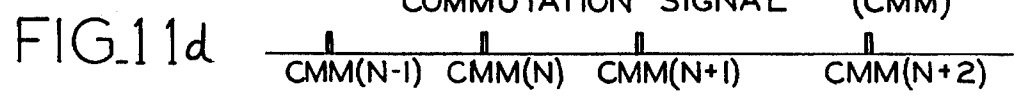


FIG_11d

COMMUTATION STRATEGY

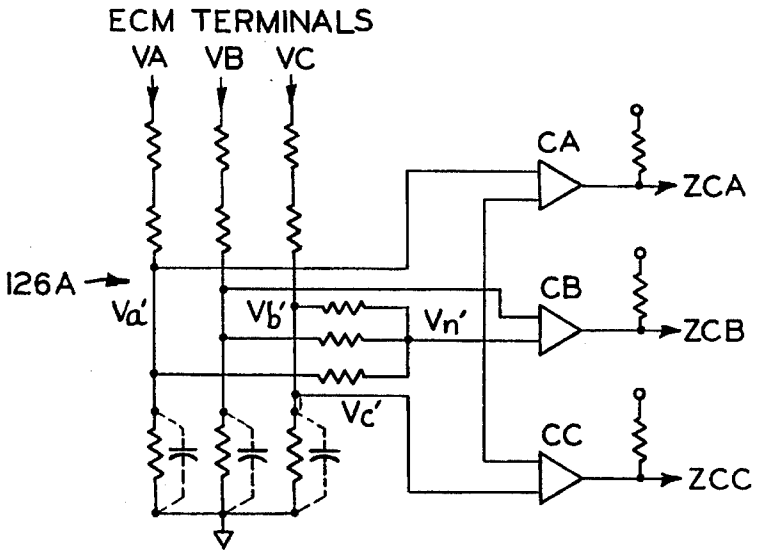


MOTOR BACK EMF VOLTAGE SENSING CIRCUIT

FIG_9

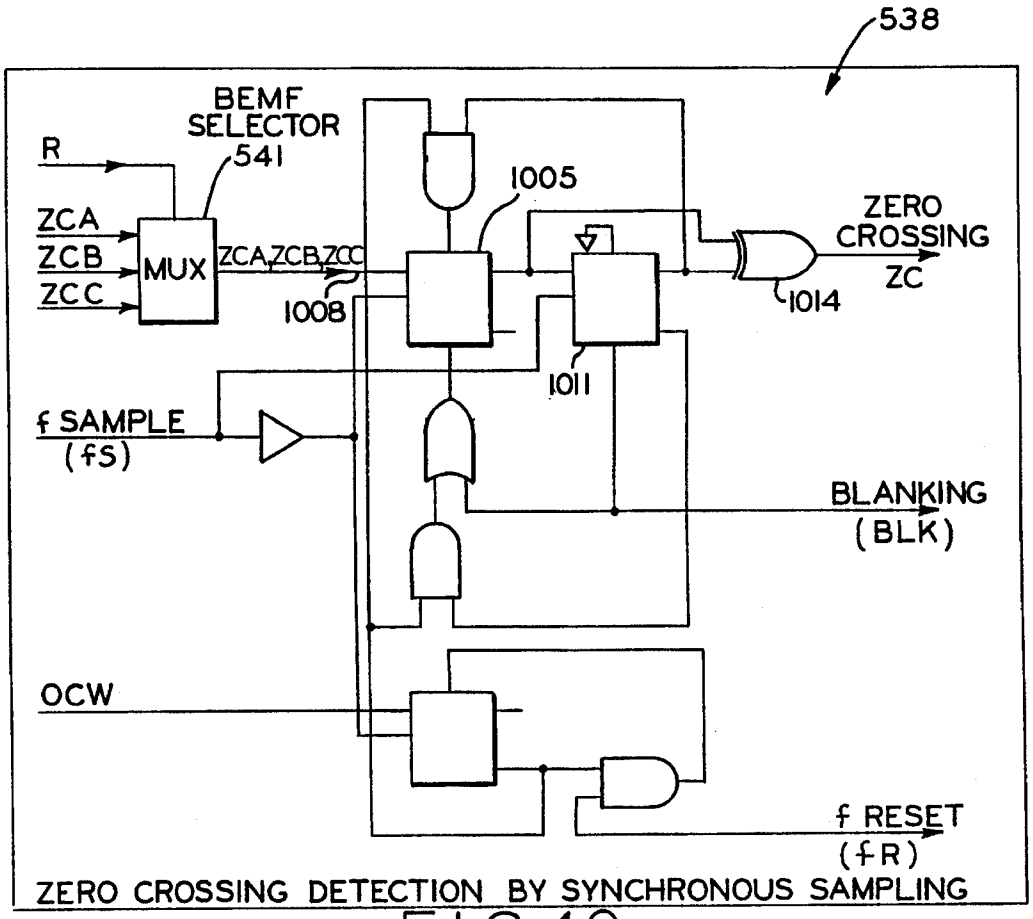


ZERO CROSSING DETECTION BY SYNCHRONOUS SAMPLING

FIG_10

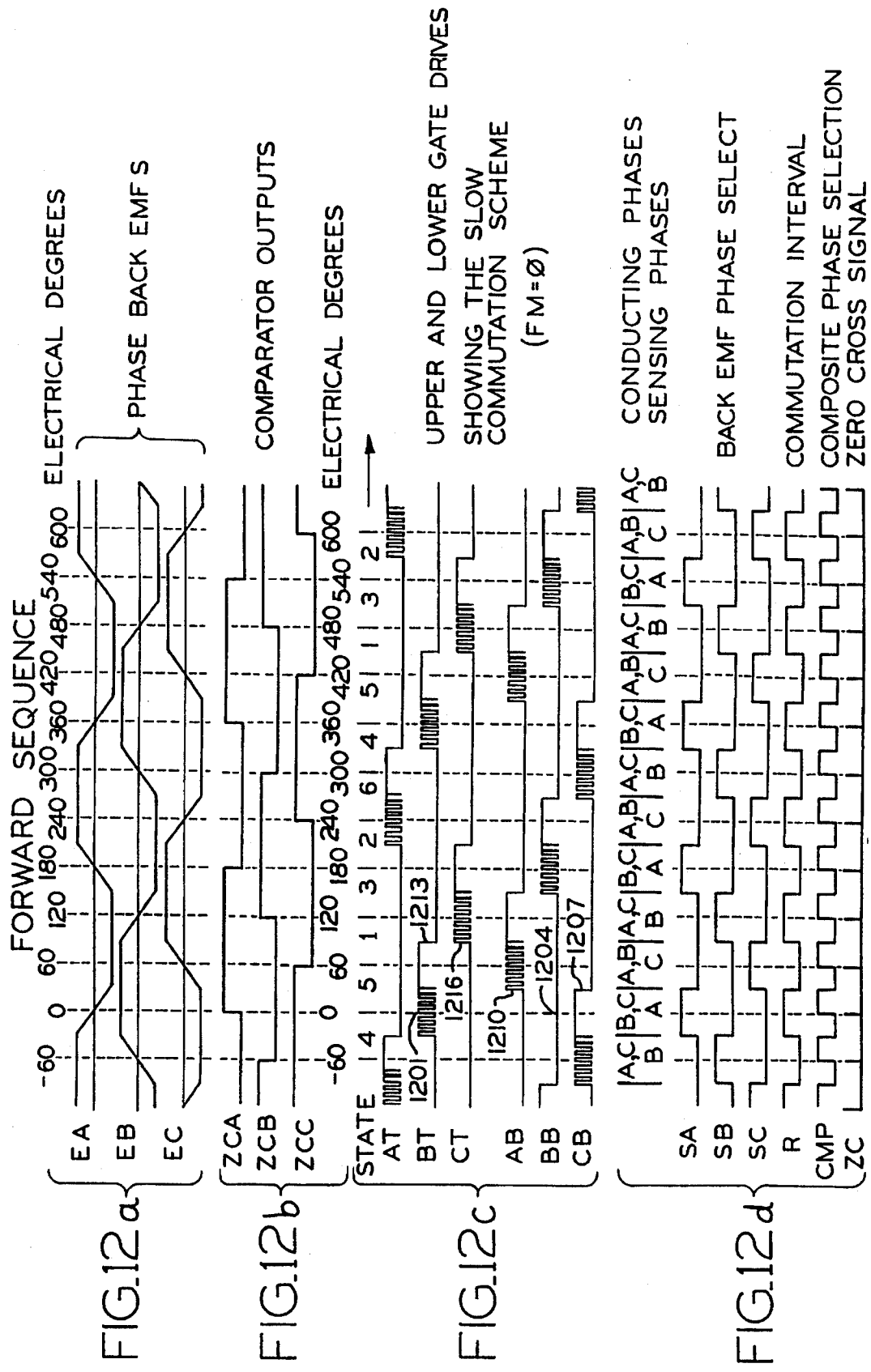
FORWARD SEQUENCE
-60 0 60 120 180 240 300 360 420 480 540 600 ELECTRICAL DEGREES
PHASE BACK EMF S
EA
EB
EC
FIG.12a
COMPARATOR OUTPUTS
ZCA
ZCB
ZCC
-60 0 60 120 180 240 300 360 420 480 540 600 ELECTRICAL DEGREES
FIG.12b
UPPER AND LOWER GATE DRIVES
SHOWING THE SLOW COMMUTATION SCHEME
(FM=Ø)
STATE 4 5 1 3 2 6 4 5 1 3 2
AT
BT
CT
AB
BB
CB
1201
1213
1216
1210
1204
1207
FIG.12c
CONDUCTING PHASES
SENSING PHASES
BACK EMF PHASE SELECT
COMMUTATION INTERVAL
COMPOSITE PHASE SELECTION
ZERO CROSS SIGNAL
SA
SB
SC
R
CMP
ZC
FIG.12d

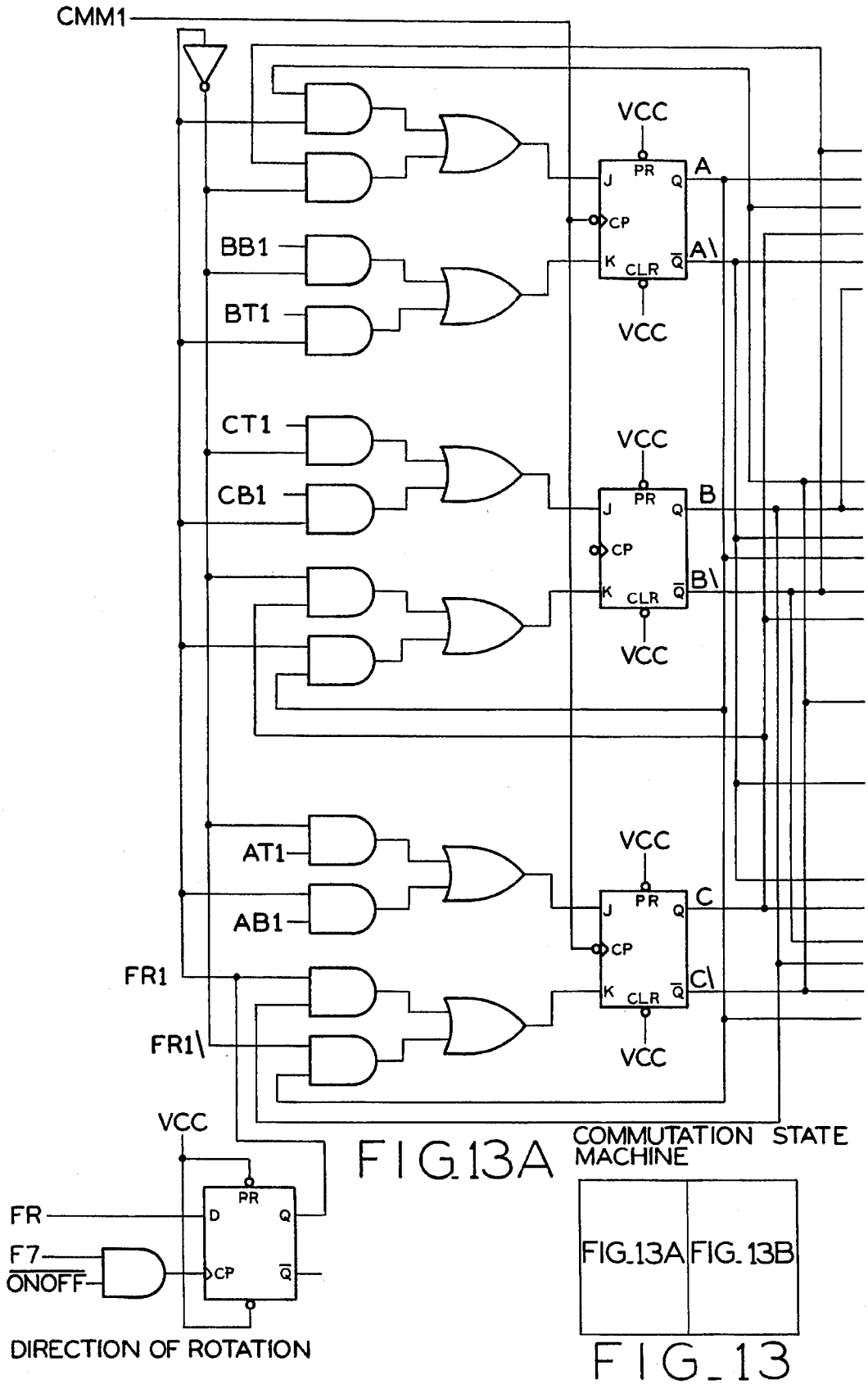
CMM1
VCC
PR
J
Q
A
CP
K
CLR
Q
A\
BB1
BT1
VCC
CT1
CB1
B
B\
AT1
AB1
C
C\
FR1
FR1\
VCC
FR
D
F7
ONOFF
DIRECTION OF ROTATION
COMMUTATION STATE MACHINE
FIG.13A
FIG.13A FIG.13B

FIG_13

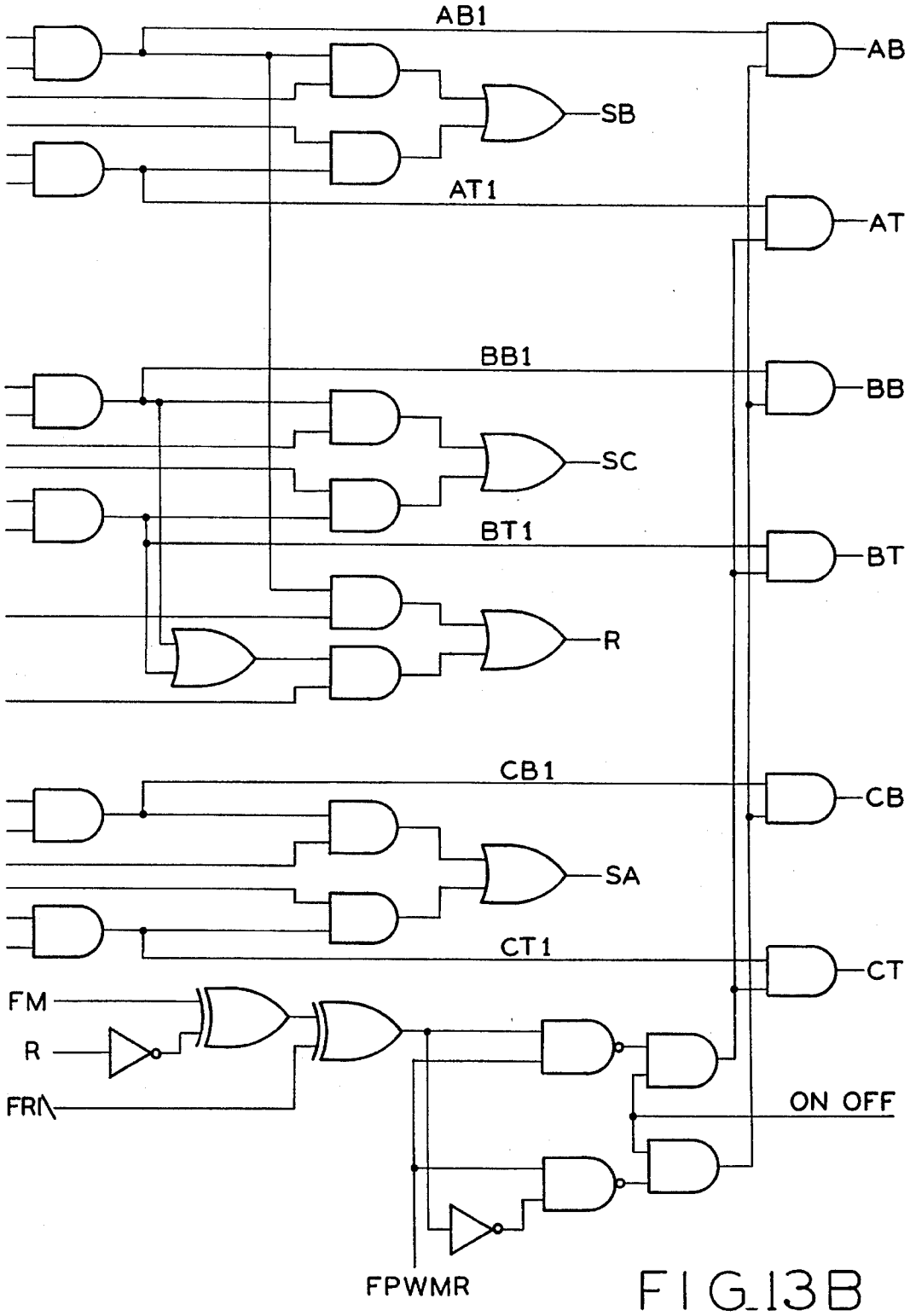
AB1
SB
AT1
AB
AT
BB1
SC
BT1
R
BB
BT
CB1
SA
CT1
CB
CT
FM
R
FR
ON OFF
FPWMR

FIG_13B

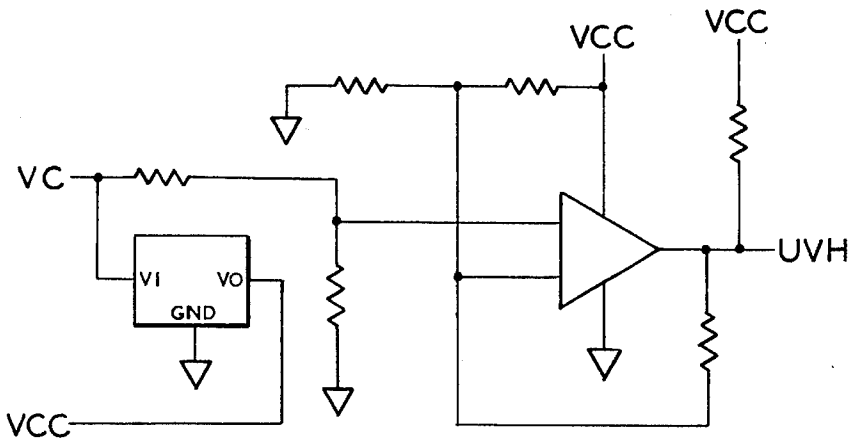


UNDERVOLTAGE DETECTOR 513

FIG_14

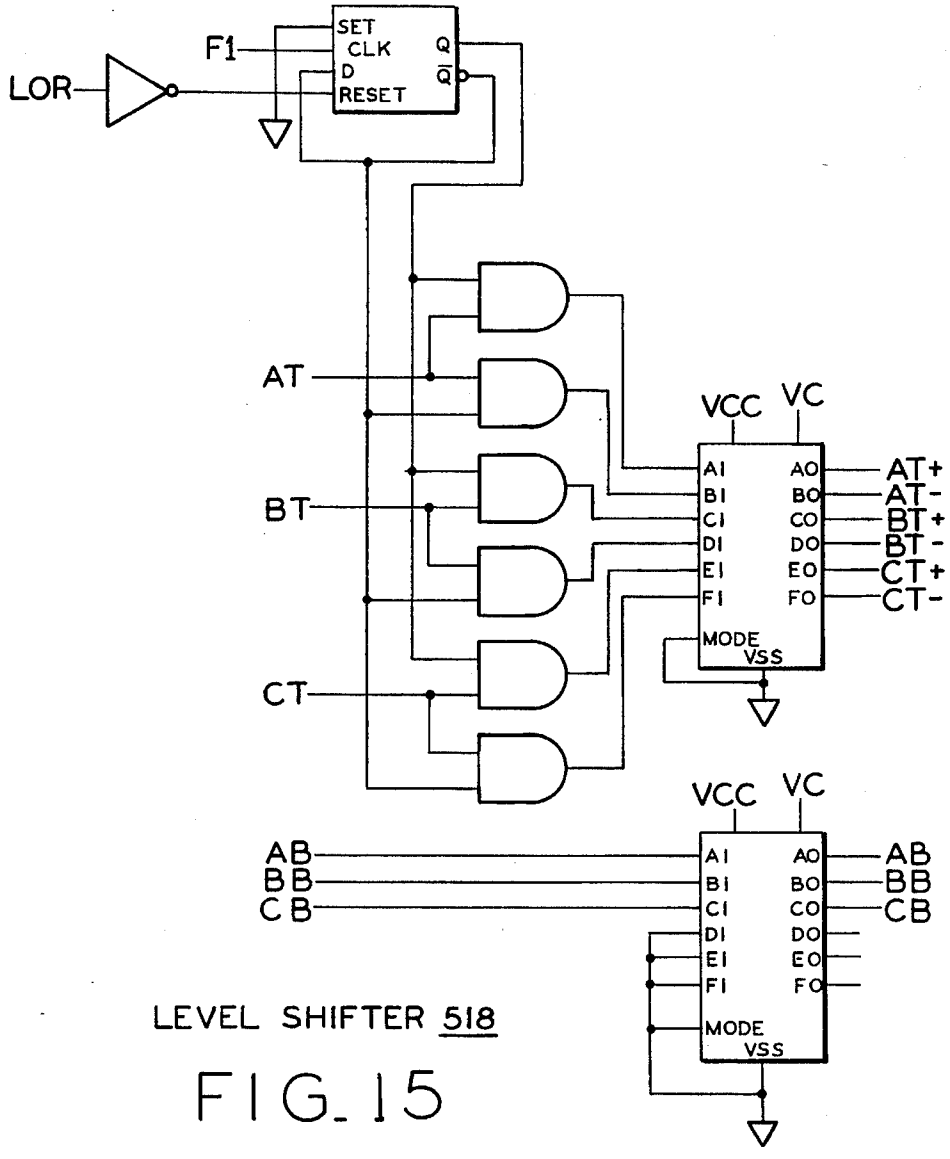


LEVEL SHIFTER 518

FIG_15

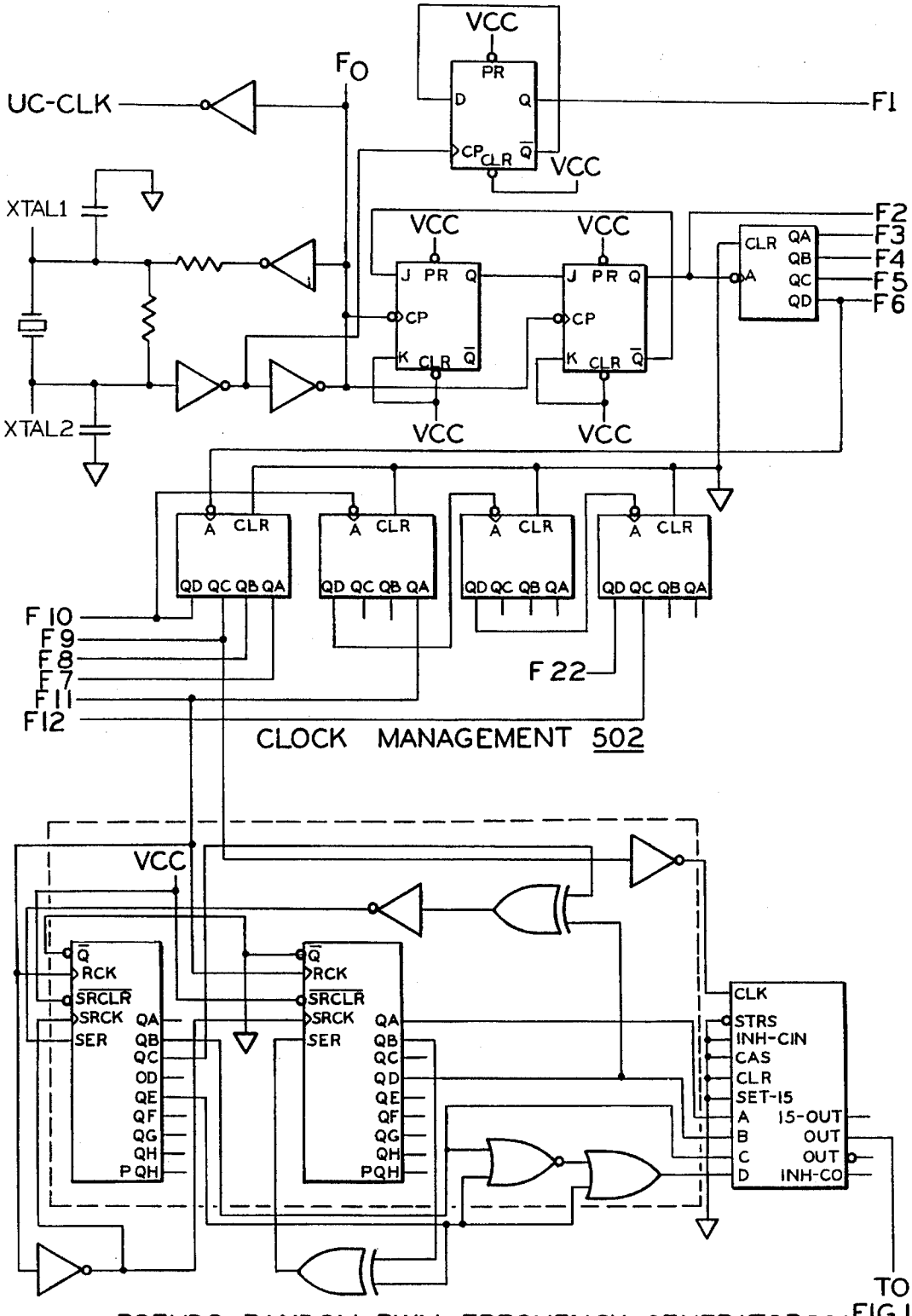
VCC
PR
D
Q
CP
CLR
Q
VCC
F0
F1
UC-CLK
XTAL1
XTAL2
VCC
VCC
J PR Q
CP
K CLR Q
VCC
VCC
CLR QA
QB
A QC
QD
F2
F3
F4
F5
F6
A CLR
QD QC QB QA
F10
F9
F8
F7
F11
F12
F22
CLOCK MANAGEMENT 502
VCC
Q
RCK
SRCLR
SRCK QA
SER QB
QC
QD
QE
QF
QG
QH
PQH
CLK
STRS
INH-CIN
CAS
CLR
SET-15
A 15-OUT
B OUT
C OUT
D INH-CO
TO FIG.17
PSEUDO RANDOM PWM FREQUENCY GENERATOR 524

FIG_16

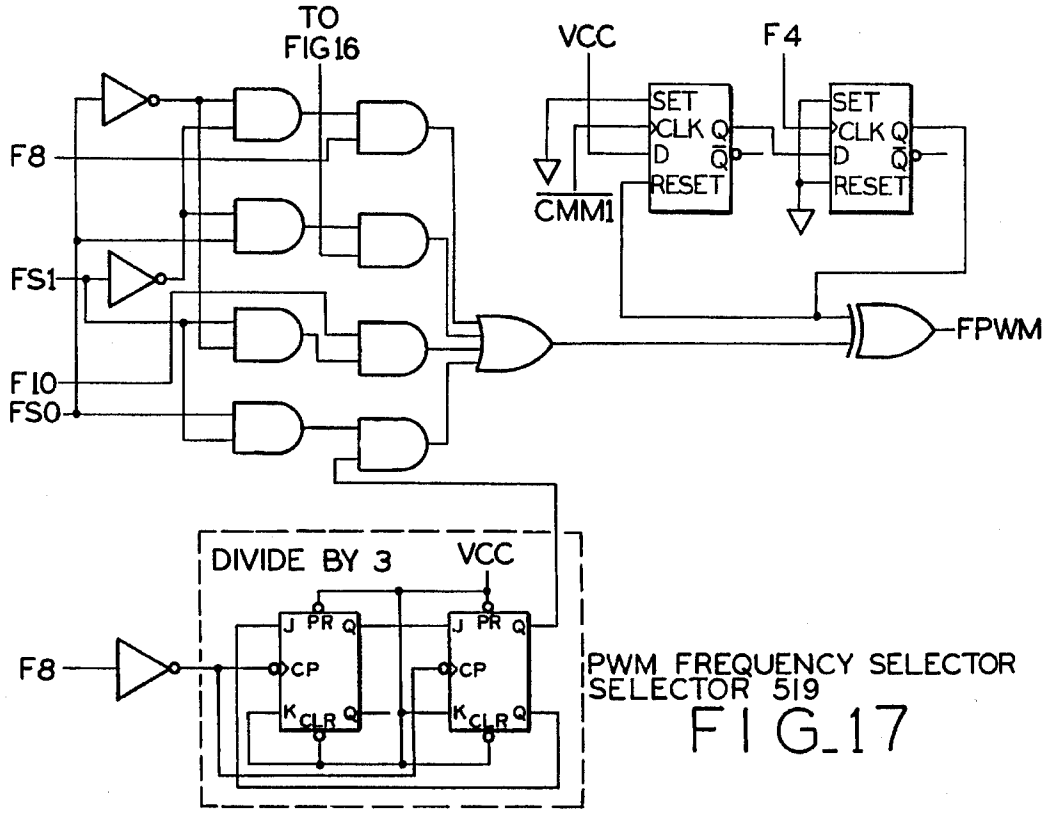
TO FIG16
VCC
F4
SET
CLK Q
D Q
RESET
CMM1
F8
FS1
F10
FS0
FPWM
DIVIDE BY 3
VCC
J PR Q
CP
K CLR Q
PWM FREQUENCY SELECTOR
SELECTOR 519

FIG_17

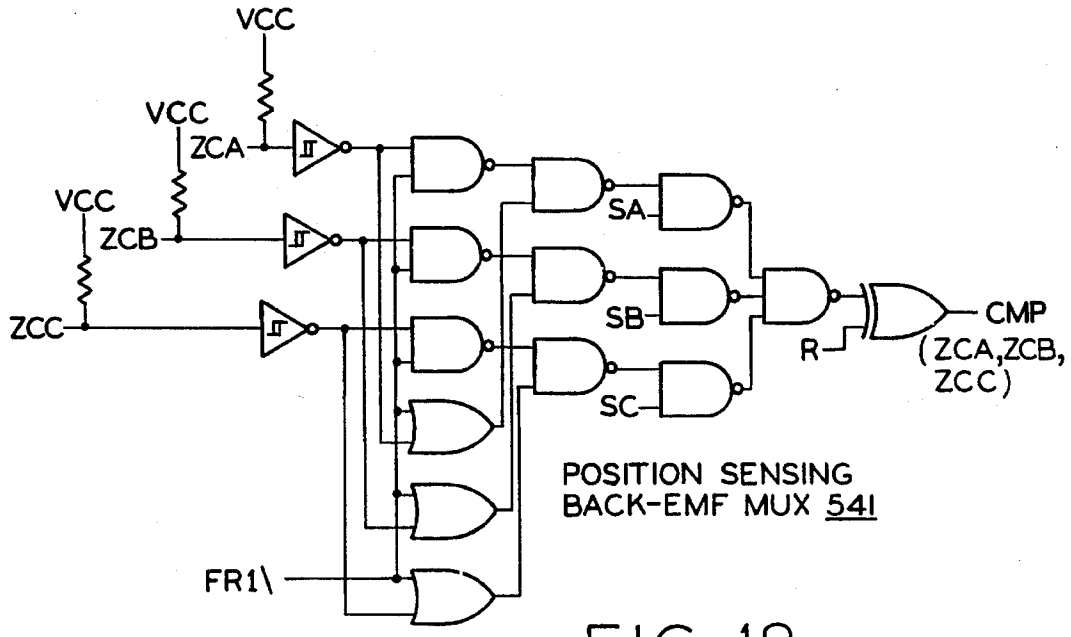
VCC
VCC
ZCA
VCC
ZCB
ZCC
SA
SB
SC
R
CMP
(ZCA,ZCB,
ZCC)
POSITION SENSING
BACK-EMF MUX 541
FR1\

FIG_18

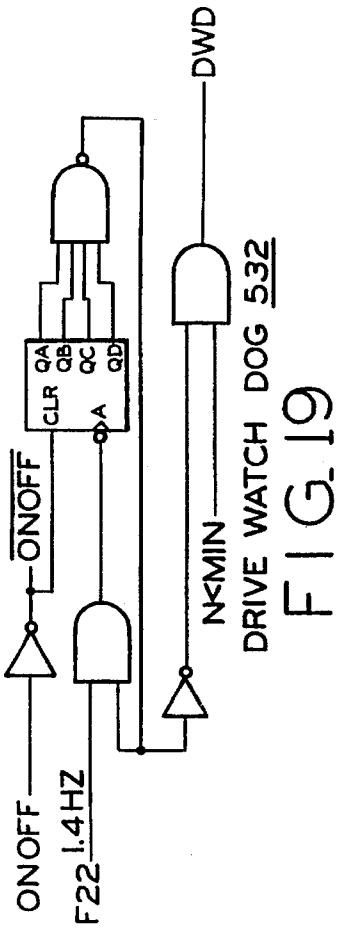
ONOFF
F22
1.4HZ
ONOFF
CLR
QA
QB
QC
QD
A
N<MIN
DWD
DRIVE WATCH DOG 532

FIG 19

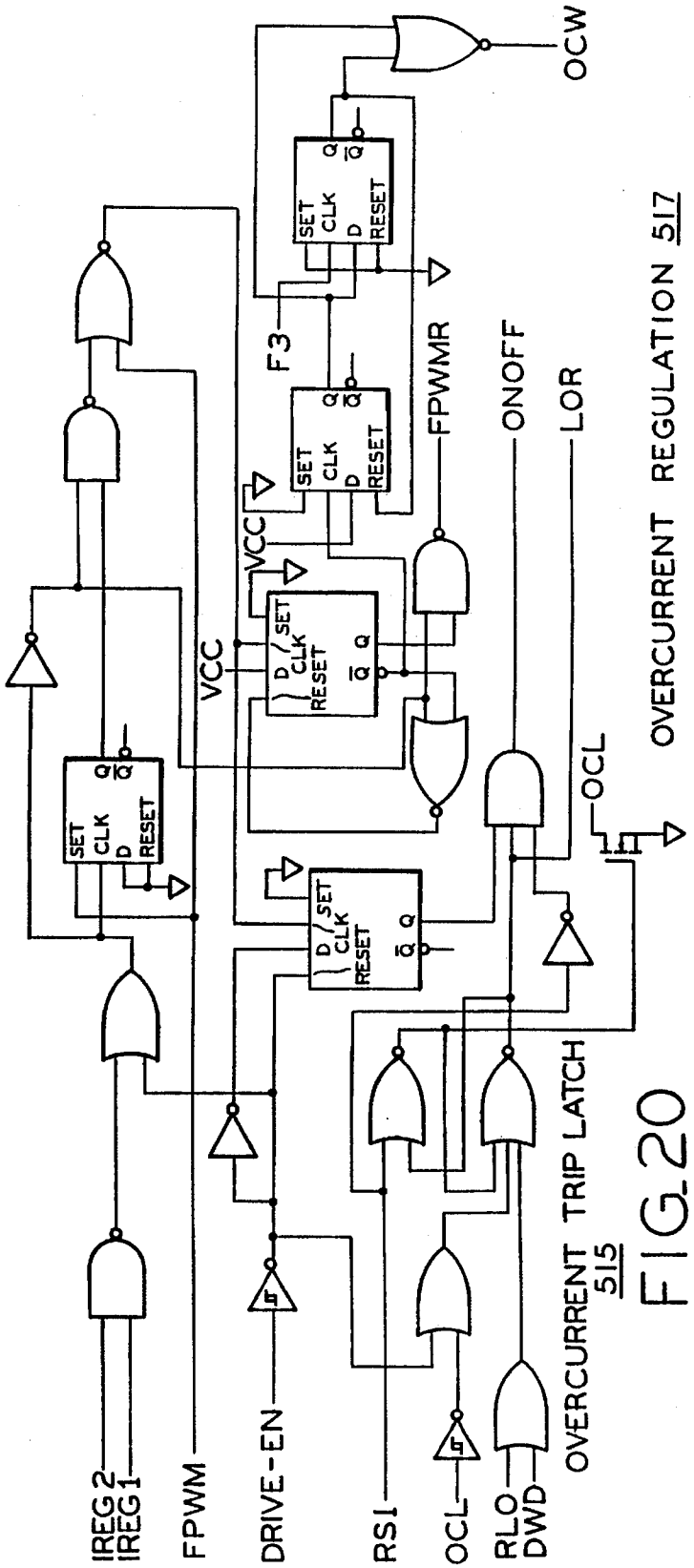
IREG2
IREG1
FPWM
DRIVE-EN
RS1
OCL
RLO
DWD
OVERCURRENT TRIP LATCH 515
VCC
F3
FPWMR
ONOFF
LOR
OCL
OVERCURRENT REGULATION 517
OCW
SET
CLK
D
RESET
Q
Q̄

FIG 20

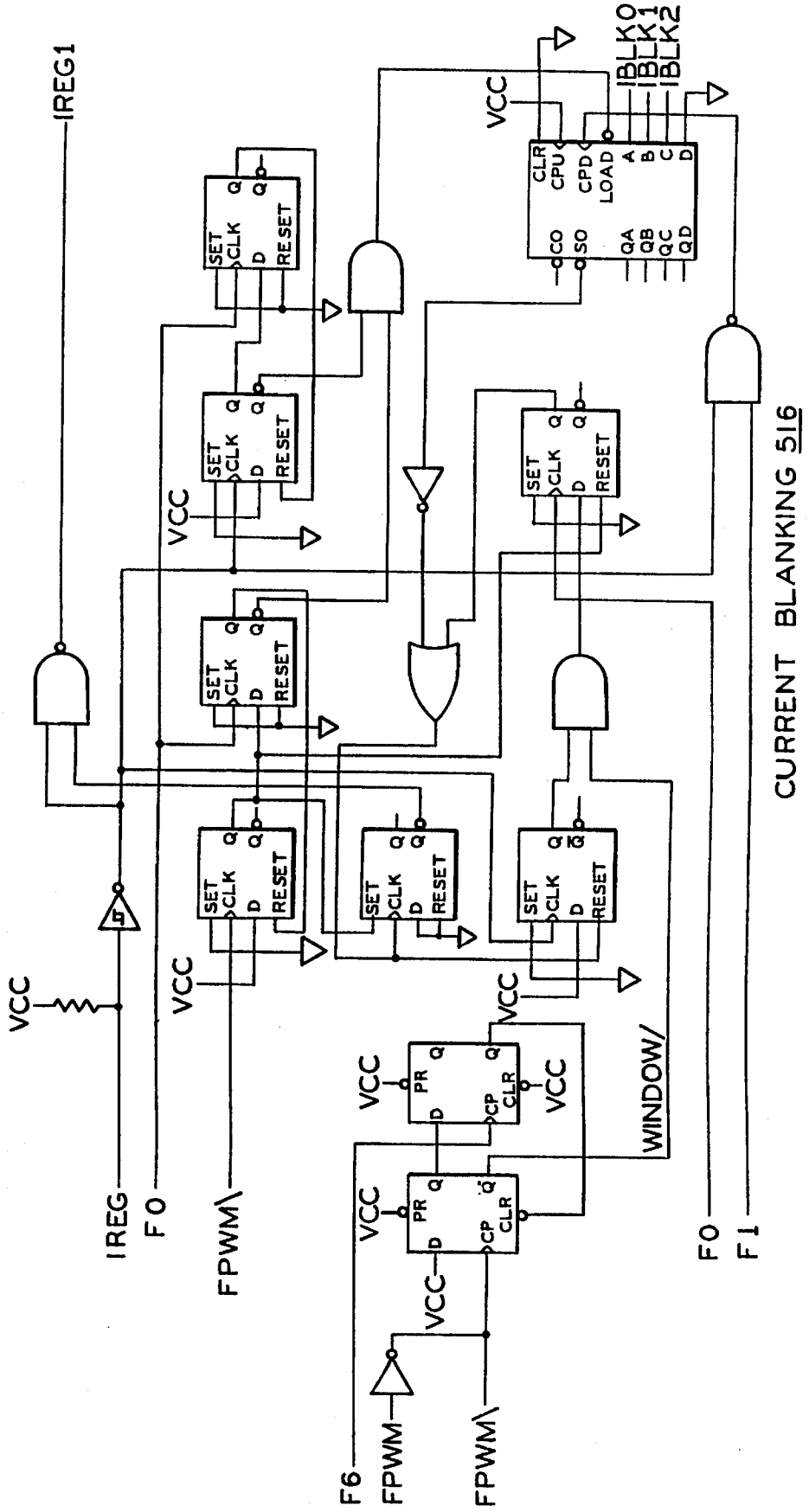
IREG1
IBLK0
IBLK1
IBLK2
VCC
CLR
CPU
CPD
LOAD
A
B
C
D
CO
SO
QA
QB
QC
QD
SET
CLK
D
RESET
Q
PR
CP
CLR
WINDOW/
IREG
F0
FPWM\
F6
FPWM
F1
CURRENT BLANKING 516

FIG_21

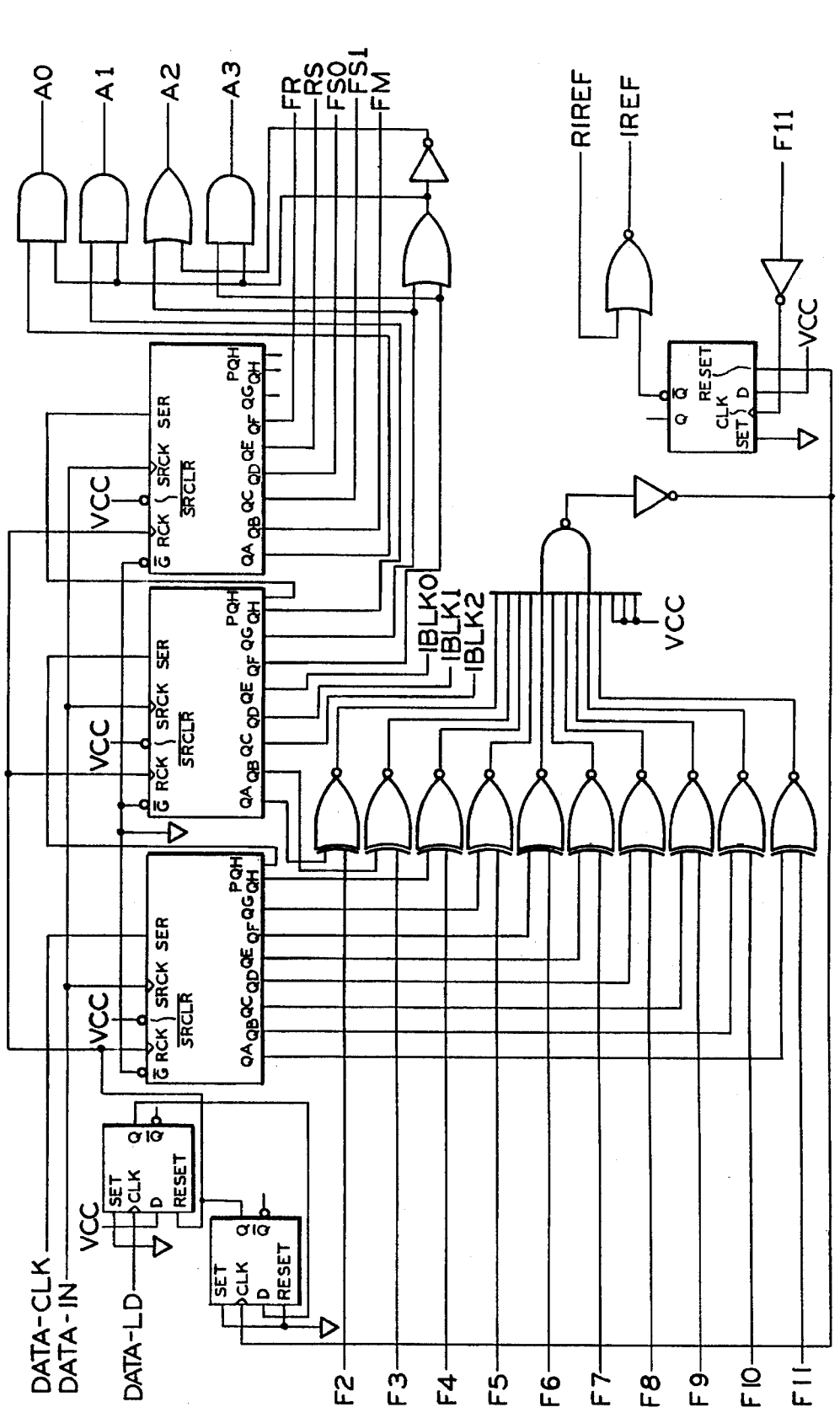


FIG_22

SERIAL LOAD AND CURRENT REFERENCE (IREF) 510

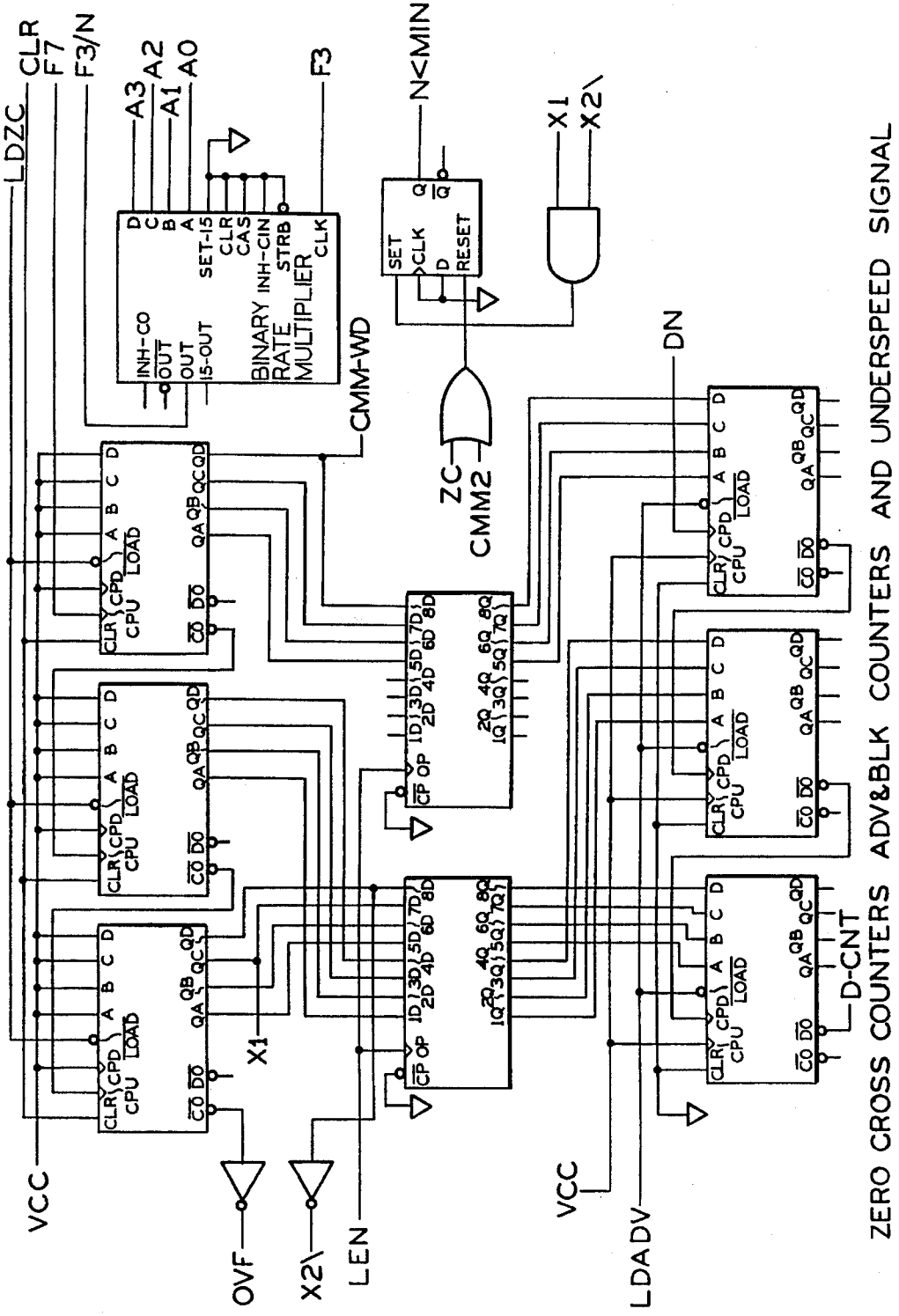
LDZC
CLR
F7
F3/N
A3
A2
A1
A0
F3
N<MIN
X1
X2\
CMM-WD
ZC
CMM2
DN
VCC
OVF
X2\
LEN
X1
VCC
LDADV
D-CNT
BINARY RATE MULTIPLIER
SET-15
INH-CIN
INH-CO
IS-OUT
SET
RESET
CLR
CPU
CPD
LOAD
ZERO CROSS COUNTERS ADV&BLK COUNTERS AND UNDERSPEED SIGNAL

FIG_23

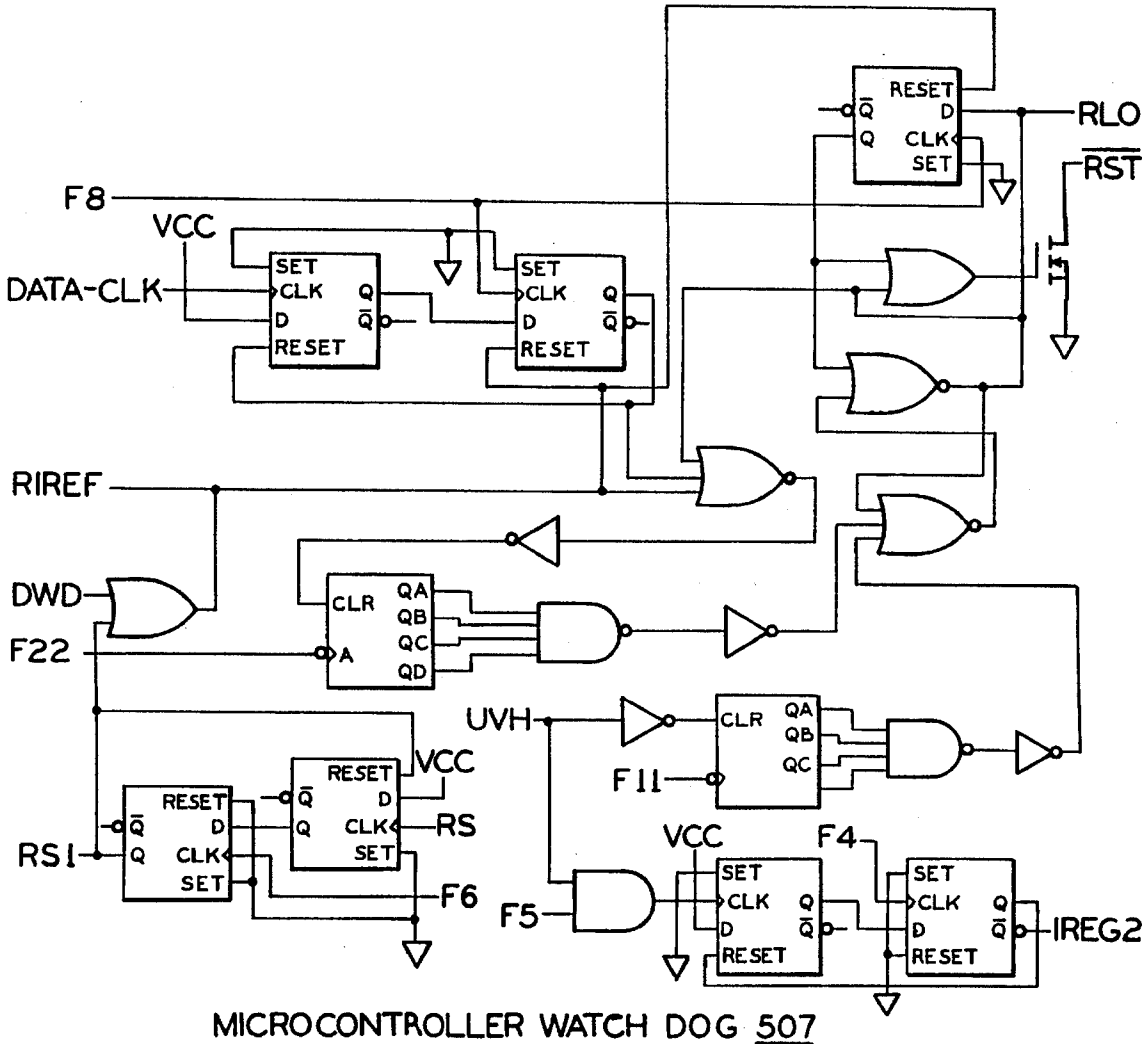


MICROCONTROLLER WATCH DOG 507

FIG_24

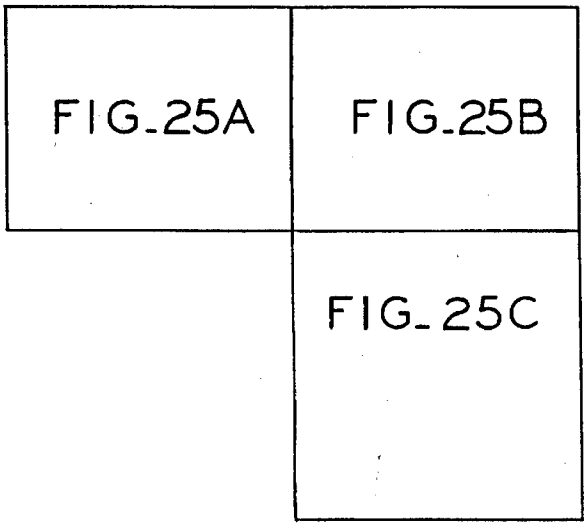


FIG_25

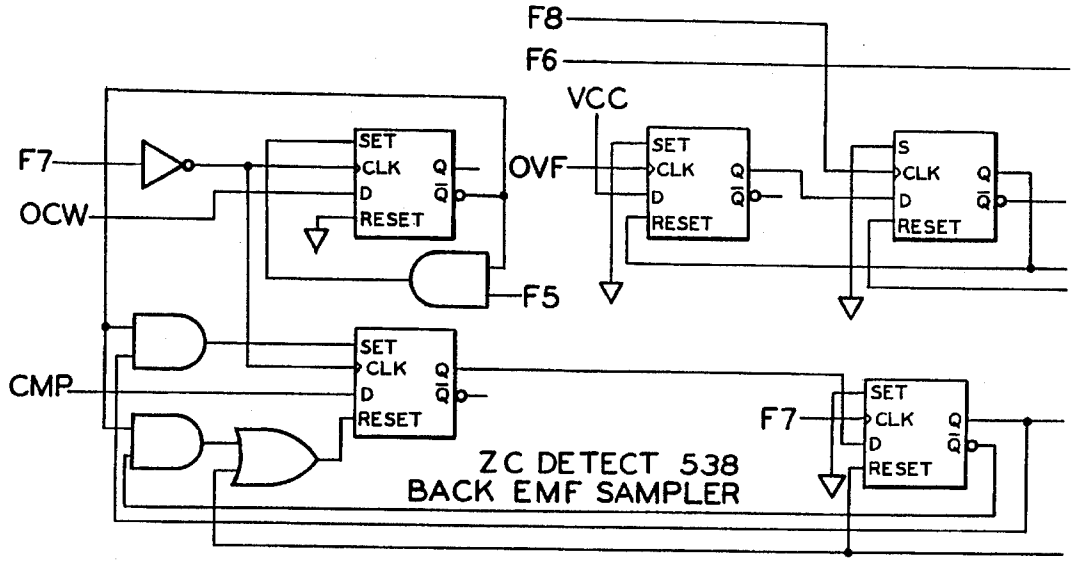


FIG. 25A

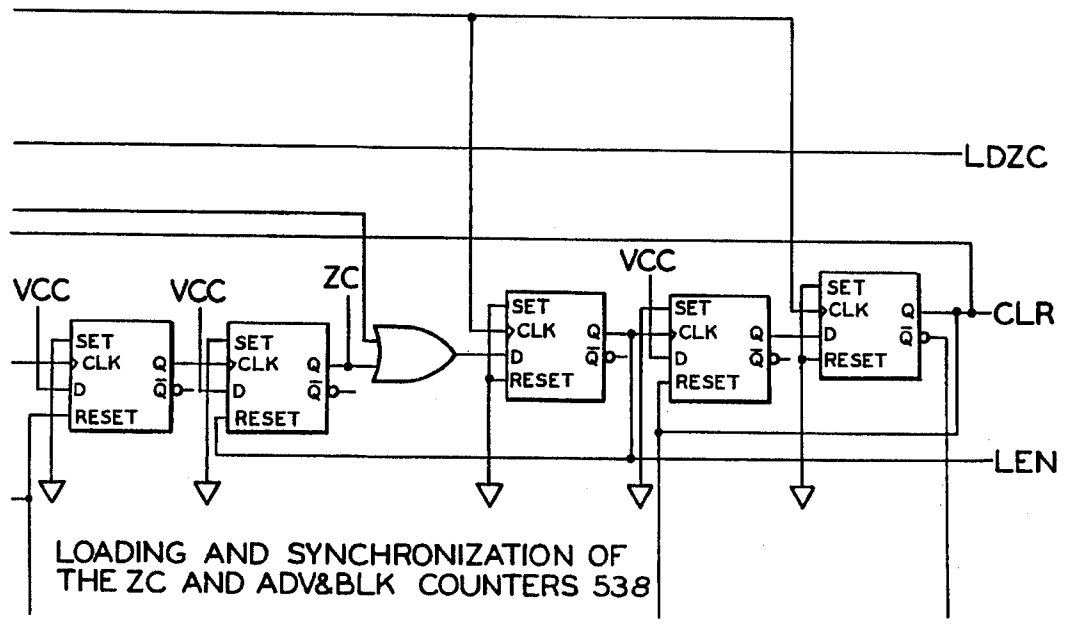


FIG. 25B

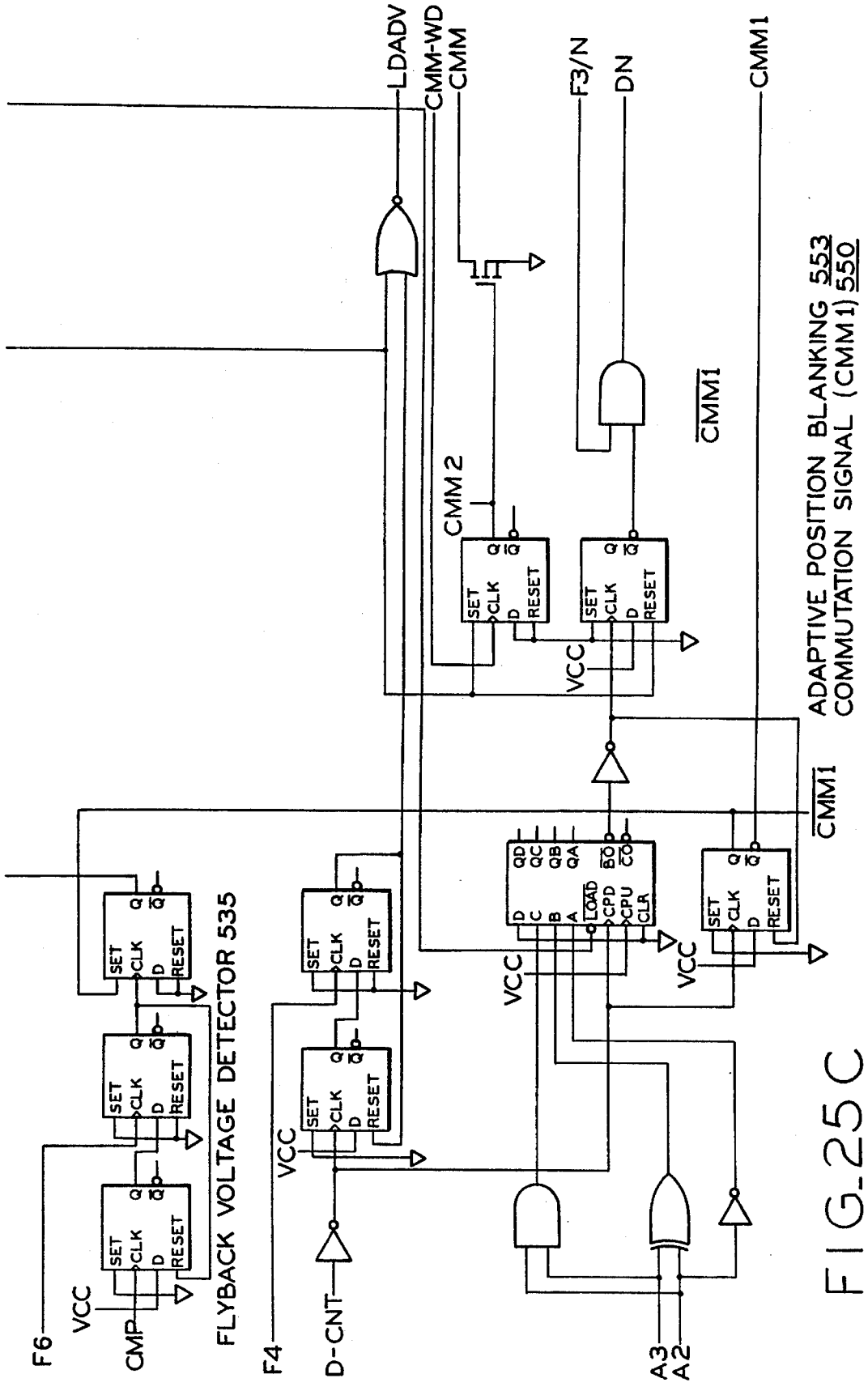
LDADV
CMM-WD
CMM
F3/N
DN
CMM1
CMM2
CMM1
ADAPTIVE POSITION BLANKING 553
COMMUTATION SIGNAL (CMM1) 550
FLYBACK VOLTAGE DETECTOR 535
F6
VCC
CMP
F4
D-CNT
A3
A2
SET
CLK
D
RESET
Q
LOAD
CPD
CPU
CLR
QD
QC
QB
QA
BO
CO

FIG_25C

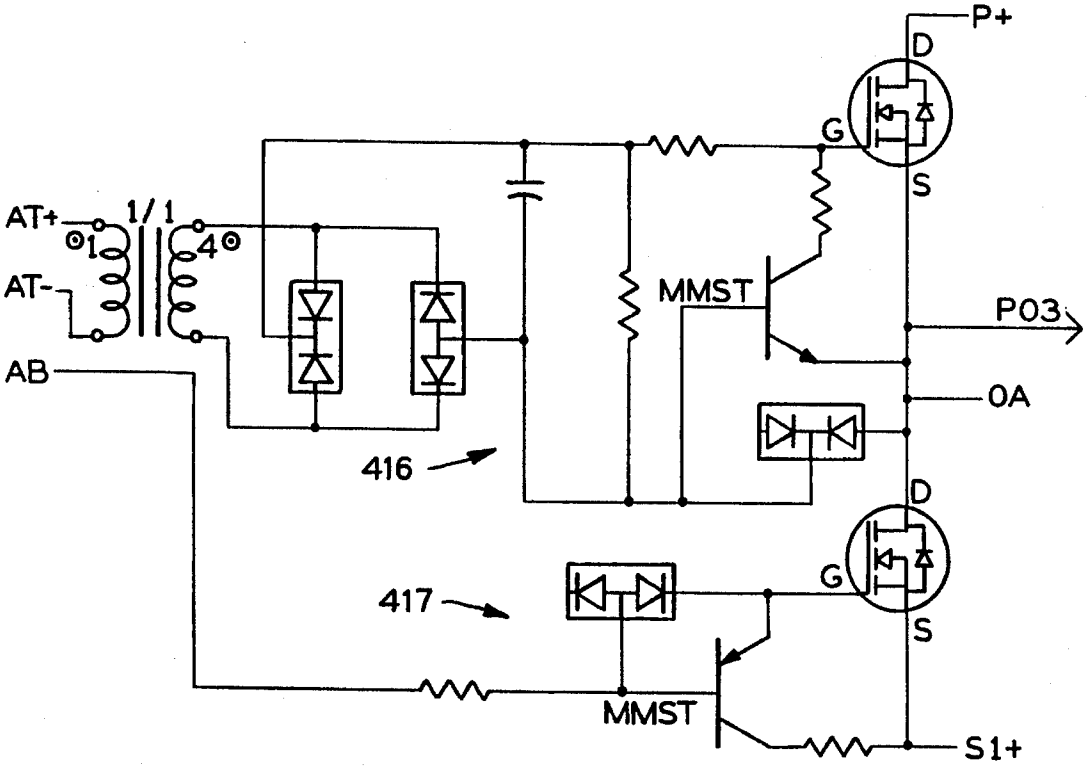


DRIVE PHASE LEG & GATE DRIVE CIRCUIT

FIG_26

# CONTROL SYSTEM AND METHODS FOR A MULTIPARAMETER ELECTRONICALLY COMMUTATED MOTOR

## BACKGROUND OF THE INVENTION

This invention generally relates to electronically controlled motors and to systems, such as heating, ventilating and/or air conditioning systems having motors therein operating according to predetermined parameters which are selected to correspond to the system in which the motor is installed.

While conventional brush-commutated DC motors may have advantageous characteristics, including convenience of changing operation speeds, there may be disadvantages such as brush wear, electrical loss, noise and radio frequency interference caused by sparking between the brushes and the segmented commutator, and overall material cost of the motor. These disadvantages may limit the applicability of such brush-commutated DC motors in many fields, including the refrigeration, heating, ventilating and/or air conditioning (HVAC) fields. Electronically commutated motors, such as brushless DC motors and permanent magnet motors with electronic commutation, have now been developed and generally are believed to have the advantageous characteristics of brush-commutated DC motors without many of the disadvantages thereof while also having other important advantages. Such electronically commutated motors are disclosed in the David M. Erdman U.S. Pat. Nos. 4,015,182 and 4,459,519, for instance. Such electronically commutated motors may be advantageously employed, for instance, in HVAC systems which employ variable speed motors.

Present motors have a variety of features and operational and system parameters which must be adjusted to optimize performance by providing a proper speed-torque characteristic for a particular application. Further, in many system applications, the starting torque and/or speed-torque characteristics of the motors must be predictable and repeatable. In addition, it is desirable that motors be operable at the highest reasonably achievable efficiency consistent with mass production techniques. Known present variable speed motors cannot easily achieve this advantage because it has traditionally been impractical or too costly to minimize the variable effect on motor characteristics caused by manufacturing tolerances of the internal components of the motor. Present concepts and arrangements for adjusting a motor for different applications require circuit changes such as multiple variable resistors in the electronic control for the motor or permanent software changes in an electronic control microprocessor. Both of the aforementioned arrangements are disadvantageous because they require a unique model to be built for calibrating a system which cannot be easily changed and can be quite expensive.

In the specific case of HVAC systems, such systems may include a variety of backup heat ratings, operate in a variety of modes, have variable capacities and be installed in a variety of environments. Both the speed and torque of an electric motor, which affect air flow through the system, are affected by the aforementioned variables. Interfacing a control microprocessor with the necessary information to make these changes often requires complex assemblies, creates possible shock hazards and/or limits the number of available variations.

## SUMMARY OF THE INVENTION

An object of the present invention is the provision of an improved central heating, air conditioning and ventilating system permitting defining operating parameters based on the environment of the system.



Another object of the invention is to provide a system which permits optimum airflow for maximum comfort and/or efficiency for varied system environments.

Still another object is to provide a system which permits interfacing defined parameters or characteristics of a motor with a memory associated with a control for an electronically commutated motor.

Still another object is to provide a system which permits interfacing a system control signal, such as a temperature signal from a thermostat, with a motor control for the motor.

It is yet another object of this invention to provide a system which permits calibrating a motor control to actual characteristics or operating parameters of a motor while driving a known load.

Yet another object is to provide a system which permits calibrating the motor to a known load.

A still further object is to provide a system which permits calibrating a motor control to motor characteristics under a no load condition.

Yet other objects are to control a motor by a microprocessor via an application specific integrated circuit.

Another object is to provide such a system which permits sensing the position of a rotating assembly of the motor for controlling torque and speed of the motor.

A still further object is to provide a system which permits sensing back electromotive force in a winding of the motor for sensing the position of the rotating assembly.

Yet another object is to provide such a system which permits selecting varied frequencies of pulse width modulation for controlling the motor.

Still another object is to provide such a system which permits limiting current in the windings of the motor to a reference level.

Another object is to provide such a system in a manner which is economically feasible and commercially practical.

Briefly described, the system of the present invention drives a component of a heating ventilating, and/or air conditioning (HVAC) system in response to a system control signal provided by a central means, such as a temperature signal provided by a thermostat. The system includes a motor, a memory, means for generating control signals and an instruction memory. The motor has a stationary assembly and a rotatable assembly in magnetic coupling relation to the stationary assembly, the rotatable assembly in driving relation to the component. The motor drives the component in response to a control signal. The memory stores parameters representative of the system. The means for generating control signals controls motor speed or torque and includes a microprocessor responsive to one or more stored parameters and to the system control signal. The instruction memory stores instructions controlling the operation of the microprocessor.

Alternatively, the system of the present invention drives a component in response to a system control signal. The system comprises a motor, a memory and means for generating control signals. The motor has a stationary assembly and a rotatable assembly in magnetic coupling relation to the stationary assembly, said rotatable assembly in driving relation to the component. The motor drives the component in response to a control signal. The memory stores calibrating parameters representative of operation of the motor driving a predetermined load. The means for generating control signals controls motor speed or torque in response to the calibrating parameters and to the system control signal.

Alternatively, the invention may comprise various other systems and methods.

Other objects and features will be in part apparent and in part pointed out hereinafter.

## BRIEF DESCRIPTION OF THE DRAWINGS

FIG. **1** is a block diagram of one preferred embodiment of an ECM drive system of the invention and including an application specific integrated circuit (ASIC).

FIG. **2** is a partial schematic diagram of one preferred embodiment of a parameter control signal interface and various parameter control signals of the invention generated by the interface.

FIG. **3** is a partial schematic diagram of one preferred embodiment of the system control signal interface.

FIG. **4** is a schematic diagram of one preferred embodiment of portions of the block diagram of FIG. **1**.

FIG. **5** is a block diagram of one preferred embodiment of an application specific IC (ASIC) of the invention.

FIG. **6** is a block diagram of one preferred embodiment of the current blanking circuit of the ASIC shown in FIG. **5**.

FIG. **7** is a block diagram of one preferred embodiment of the reference current circuit of the ASIC shown in FIG. **5**.

FIG. **8** is a schematic diagram of one preferred embodiment of the pseudo-random pulse width modulation frequency generator of the ASIC shown in FIG. **5**.

FIG. **9** is a schematic diagram of one preferred embodiment of the back EMF voltage sensing network shown in FIG. **4**.

FIG. **10** is a schematic diagram of one preferred embodiment of the zero crossing detector, employing synchronous sampling, of the ASIC shown in FIG. **5**.

FIG. **11** is a timing diagram illustrating one preferred embodiment of a preferred commutation strategy relating to zero crossings and blanking.

FIG. **12** is a timing diagram illustrating one preferred embodiment of commutation and sequencing of the invention.

FIG. **13** is a layout diagram of FIGS. **13A–13B**.

FIGS. **13A–13B** illustrate one preferred embodiment of a schematic diagram of the commutation logic circuit and back EMF decoder of the ASIC of FIG. **5**.

FIG. **14** is a schematic diagram of one preferred embodiment of an undervoltage detector of the ASIC of FIG. **5**.

FIG. **15** is a schematic diagram of one preferred embodiment of the level shifters of the ASIC of FIG. **5**.

FIG. **16** is a schematic diagram of one preferred embodiment of the pseudo random PWM frequency generator and clock management of the ASIC of FIG. **5**.

FIG. **17** is a schematic diagram of one preferred embodiment of the PWM frequency selector of the ASIC of FIG. **5**.

FIG. **18** is a schematic diagram of one preferred embodiment of the position sensing back EMF multiplexer of the ASIC of FIG. **5**.

FIG. **19** is a schematic diagram of one preferred embodiment of the drive watch dog circuit of the ASIC of FIG. **5**.

FIG. **20** is a schematic diagram of one preferred embodiment of the current regulation circuit of the ASIC of FIG. **5**.

FIG. **21** is a schematic diagram of one preferred embodiment of the current blanking circuit of the ASIC of FIG. **5**.

FIG. **22** is a schematic diagram of one preferred embodiment of the current reference generating circuit of the ASIC of FIG. **5**.

FIG. **23** is a schematic diagram of one preferred embodiment of the zero crossing counters, the commutation and blanking counters and the underspeed detector circuit of the ASIC of FIG. **5**.

FIG. **24** is a schematic diagram of one preferred embodiment of the microcontroller watch dog circuit of the ASIC of FIG. **5**.

FIG. **25** is a layout diagram of FIGS. **25A–25C**.

FIG. **25A–25C** are a schematic diagram of one preferred embodiment of the zero crossing detector, flyback voltage detector and adaptive blanking circuit of the ASIC of FIG. **5**.

FIG. **26** is a schematic diagram of one preferred embodiment of the gate drives to the power switches of FIG. **1**.

Corresponding reference characters indicate corresponding parts throughout the drawings.

## DETAILED DESCRIPTION OF THE PREFERRED EMBODIMENTS

Referring to FIG. **1**, a system **100**, one preferred embodiment of the present invention, which is part of an indoor unit (not shown) of a heating, ventilating or air conditioning (HVAC) system for moving air is illustrated. System **100** includes a microprocessor **102** for receiving via optical isolators **103** a temperature signal and/or other system control signals generated by a system control **104**. A read only memory (ROM) **106** having software is used to control the operation of the microprocessor **102**. ROM **106** may be incorporated with microprocessor **102** embodied as a microcontroller. Microprocessor **102** provides a set of motor control signals (M.C.S.) via line **110** to an application specific integrated circuit (ASIC) **112** or universal electronically commutated motor integrated circuit (UECM IC, not shown) for electronically controlling a plurality of gate drives **130** (see FIG. **26**). The ASIC **112** provides information to microprocessor **102** via line **111**. The ASIC **112** provides level shifted gate drive signals via line **131** which have been shifted from 5 volts to 10 volts in order to provide enough voltage to switch a plurality of power switches **124** (see FIG. **26**). The power switches **124** are use to control a motor such as a variable speed induction motor, a switched reluctance motor or an electronically commutated motor (ECM) **114**. For example, speed or torque of the motor may be controlled by controlling the power delivered to the load in order to control an air flow rate of an HVAC which includes the system **100**. Electronically commutated motor (ECM) **114** has a rotatable assembly (not shown), or rotor, mechanically connected via a shaft **116** to a particular device to be driven, such as a blower, a compressor or a draft inducer (not shown) or a fan **118**.

In addition, a programmable, non-volatile (PNV) memory **120** may be provided for storing various system parameters, as will be described below in greater detail, which parameters are used by the microprocessor **102** to determine operation of motor **114**. PNV memory **120** may be an electrically erasable programmable read only memory (EEPROM). System **100** also includes a power supply **122** which provides power to operate the microprocessor **102** and ASIC **112** which drives the associated power switches **124**. Power supply **122** also provides high voltage d.c. (H.V.D.C.) to the power switches **124** for driving the windings of the electronically commutated motor **114**.

Motor **114** may include means for sensing the position of its rotatable assembly such as a position sensing circuit **126** for sensing a back electromotive force (BEMF) and which

provides a zero crossing detector signal via line **127** to which ASIC **112** is responsive. A BEMF sensing circuit **126**A (see FIG. **4**) includes a sensing network and comparators. Microprocessor **102** may also include an internal analog-to-digital converter (not shown) for converting incoming analog signals into digital signals for further processing.

The ASIC **112** also responds to a current control circuit **129** for detecting overcurrent conditions in the windings of motor **114**. The system of the invention includes two overcurrent detecting circuits **129**A (see FIG. **4**), both of which provide signals to the ASIC **112**, to provide redundant overcurrent information. A current blanking scheme in ASIC **112** differentiates between an actual overcurrent signal and a false one caused by noise in the circuit. In the event of an overcurrent condition, the ASIC **112** removes the power applied to the motor **114** by turning off the gate drive signals. Current control circuit **129** also includes a current regulator **129**B (see FIG. **4**) providing a regulation signal (IREG) to AS1C **112**. The current control circuit **129** as well as the internal overcurrent protection of the ASIC will be described in greater detail below.

The microprocessor **102** may be associated with programmable nonvolatile (PNV) memory **120** storing parameters representative of the system such as time constants which are a function of the thermal mass of the structure being heated and/or cooled by the indoor unit of the HVAC. Alternatively, PNV memory **120** may store parameters representative of the system characteristics. The microprocessor **102** may by connected via optoisolators **103** to a keypad or dip switches (not shown) responsive to operator input for providing a parameter select signal by selecting at least one of the stored parameters. The microprocessor **102** generates motor control signals (M.C.S.) via line **110** based on the parameters stored in memory **120** and in response to the parameter select signals thereby controlling the system **100**. Alternatively, it is contemplated that the PNV memory **120** may include a parameter stored therein which is representative of the rotor magnetization level of the rotatable assembly. As a result, the motor control signals generated by the microprocessor **102** would be a function of the stored parameter in addition to the control signal parameters.

The system **100** may also be responsive to a mode signal provided to the microprocessor **102** via optoisolators **103** as a system control signal. For example, the mode signal may determine whether system **100** operates in a thermostat mode or in a variable speed mode. A PWM mode signal indicates variable speed or torque operation of the motor with the duty cycle of the mode signal corresponding to the desired motor speed or torque. In this configuration, microprocessor **102** detecting system control signals via optoisolators **103** would constitute means for detecting as a system control signal a mode signal having a particular form and means for selecting parameters for use by the control signal generating means in response to the detected mode signal.

FIG. **1** illustrates system **100** according to the invention for conditioning air in a space by moving the air or by heating or cooling the air to change its temperature. System control **104**, such as a conventional thermostat, constitutes means for generating a system control signal such as a temperature signal corresponding to the temperature of the air space as it rises and falls. This system control signal is provided to microprocessor **102** via optical isolators **103**.

For example, the EEPROM may have one or more of the following parameters stored therein: speed or air flow rate for various operating modes such as a heating mode and a cooling mode; speed or air flow rates for different system capacities such as tons of cooling and kilowatts of heating; parameters defining turn-on and turn-off time delays; parameters defining motor speed or torque changes over time; parameters defining the relationship between motor torque and air flow: parameters defining the relationship between motor speed and air flow; and parameters defining direction of rotation; and wherein the control signals generated by the microprocessor are a function of at least one of the stored parameters. Alternatively, the EEPROM may include a parameter stored therein which is representative of a difference between the actual power input into the system and the expected nominal power so that the control signals generated by the microprocessor **102** are a function of the difference.

As shown in FIG. **1**, system **100** constitutes variable speed motor **114** which has a rotatable assembly, or rotor, in driving relation to the component such as fan **118**. System **100** is responsive to the system control signal and has programmable nonvolatile (PNV) memory **120** which stores parameters representative of system **100**. The motor control signal provided by microprocessor **102** to ASIC **112** via line **110** is responsive to at least one of the stored parameters plus the parameters selected in response to the parameter select signal and to the system control signal. System **100** provides the M.C.S. to ECM **114** to control its speed or torque. ROM **106** stores instructions which control the operation of microprocessor **102**. The microprocessor **102** constitutes means responsive to the system control signals provided via optical isolators **103** by system control **104**. The microprocessor **102** receives the system control signals, such as the temperature signal and monitors it to generate the motor control signal provided via line **110** as a function of the system control signal and the parameter select signal as well as any stored parameters.

Various time constants may be stored in PNV memory **120** which correspond to various parameters of various environments. Microprocessor **102** may be programmed at the factory or during field installation to select time constants corresponding to the environments within which the indoor unit including system **100** is being installed. The stored parameters may correspond to a constant CFM calibration, i.e., representative of a calibrated operation of the ECM **114** driving a predetermined, known load so that microprocessor **102** would be accurately responsive to the stored parameters.

As part of the process of manufacture, system **100** is operated with a known calibration load with a predetermined current versus speed characteristic. This load, for example, could be an ECM driving a blower wheel with a known restriction to the flow of air. It could also be an artificial load which electronically simulates the loading characteristics and waveforms present at the terminals of motor **114**. The system **100** is calibrated by running it on this calibration load and commanding it to deliver, in sequence, one or more current levels to the load. For example, it may first be commanded to provide the full or maximum current level and then a relatively low current level. In each case, the actual current delivered by the system **100** is measured either directly or indirectly by measuring the speed achieved on the calibration load. Due to circuit tolerances within the particular system **100**, the actual current values may be somewhat different from the correct or nominal values. This actual information generates a current offset factor and a multiplier factor compensating for the inaccuracies within the system **100**. The compensation factors are stored permanently in the PNV memory **120**. In this manner, the system **100** is calibrated to compensate for the tolerance variations of its internal components.

Alternatively, the parameters may be representative of a calibrated operation of ECM **114** driving no load so that the microprocessor **102** is accurately responsive to such stored parameters. In the case of ECM **114**, an alternate simplified method of calibration may be used. The system **100** is run at no load and the no load speed is measured. No load speed is a very good indicator of rotor magnetization level which is the predominant cause of torque variations. Storing this information along with the previously obtained control calibration information in an EEPROM used as PNV memory **120** allows subsequent compensation for most of such tolerance variations. No load motor tests are much less time consuming than load tests and do not require a dynamometer. As such, they are routinely performed anywhere. The built-in microprocessor **102** in the control can by itself measure the no load speed and store the data in the PNV memory **120**, requiring minimal external equipment.

Alternatively, the parameters stored in PNV memory **120** may be representative of an operation of a particular motor **114** in combination with a particular system **100** to provide a representative operation of particular motor **114**. For example, the stored parameters may represent the difference between the actual torque generated by a particular motor **114** and the nominal values thereby representing the combined inaccuracies of the particular motor **114** in combination with the microprocessor **102**. In a number of applications, the system **100** and the motor **114** are physically attached together and distributed as a single unit. In such cases, the system **100** would be programmed with not only its own inaccuracies but also those of the motor **114** to which it is attached.

Generally, the system **100** without motor **114** is first calibrated by one of the methods described above. The calibrated system is then connected to the motor **114**. The system and motor combination are then calibrated, for example, by running them on a loading/measuring device such as a dynamometer. Certain torque level(s) are commanded of the system **100** and motor **114** and the resulting actual torques are measured. The difference between the actual torques and the correct or nominal values represents the combined inaccuracy of the system and the motor. This information is stored in the PNV memory **120** to enable the microprocessor **102** to produce near-nominal torque in the actual operation by compensating for the tolerance inaccuracies of both motor **114** and system **100**.

This correlation between actual and nominal values may be extended beyond improvement of system and motor combination accuracy to calibration of variations in the target system. A typical application for variable speed motors is driving blower wheels in gas furnaces or indoor fan coil units of central heating and air conditioning systems. The key performance parameter is blower air flow which depends on motor speed-torque characteristics, restriction level (static pressure) in an installation, and physical characteristics of the blower wheel such as blade pitch, etc. Methods have been previously devised to generally compensate for the static pressure variations, making the air flow somewhat independent of installation. However, to achieve the best air flow accuracy, unit to unit variations due to blower wheel characteristics need to be calibrated out. This can be accomplished in the following manner. A calibrated system and motor combination is installed in the particular blower wheel of a furnace or fan coil unit. The inlet and outlet openings of the unit are kept at a predetermined level, including completely open, thus, ensuring a known restriction level. Operation of the motor **114** with a certain system control signal provided to the control should then result in a predictable nominal blower speed or power. The actual blower speed or power is measured and its deviation from nominal represents the inaccuracy of the blower wheel. This information is stored in the PNV memory **120** so that microprocessor **102** can compensate in actual operation.

In one preferred embodiment, memory **120** comprises an EEPROM having one or more of the following parameters stored therein: speed or air flow rate for various operating modes such as a heating mode and a cooling mode; speed or air flow rates for different system capacities such as tons of cooling or kilowatts of heating; parameters defining turn-on and turn-off time delays; and parameters defining direction of rotation. Each parameter may also differ depending on the mode of operation. For example, the following modes may be used: heat pump, backup heat, emergency heating, dehumidifier, fan only, or other modes. As a result, the motor control signals generated by microprocessor **102** and provided via line **110** would be a function of at least one or more of the stored parameters.

As noted above, it is also contemplated that the memory **120** may include a correction factor (such as a current offset or a multiplier) for tolerance inaccuracies of the any one or more portions of the system. For example, the memory **120** may include a parameter stored therein which is representative of the difference between the actual current being delivered to the motor **114** and the expected nominal current. As a result, the motor control signals provided by microprocessor **102** via line **110** would be a function of this stored correction factor parameter.

The parameters stored in the memory may also be representative of the difference between the actual speed of the component being driven by the motor or the actual power input (watts) into the motor **114** and the expected nominal speed or input power so that the motor control signal generated by the microprocessor **102** would be a function of this stored parameter.

In accordance with one feature of the invention, FIG. **2** illustrates means for providing parameter select signals to the microprocessor **102**. The ECM **114** of the system **100** may be configured for driving fans, such as fan **118**, for a variety of HVAC system having different heat pump capacities and backup heat ratings. Further, the fans may operate in a variety of modes such as cooling, dehumidification, fan only, heating and the like. The ECM **114** can provide optimum air flow in each case for maximum comfort and/or efficiency. In accordance with the present invention, the microprocessor **102** controls the ECM **114** in response to selected parameters corresponding to a set of operating parameters selected at installation in the field including fan speed, compressor speed, heat output and the like. Selecting the parameters is referred to as the field selection process.

In a preferred embodiment, the system **100** directly interfaces the microprocessor **102** with parameter select signals by diode duplexing. As shown in FIG. **2**, a 24 volt alternating current (24 VAC) supply voltage **200** is applied to a positively biased diode **202** which rectifies the AC voltage and provides a positive half wave output signal **204**. A negatively biased diode **206** similarly rectifies the 24 VAC signal and provides a negative half wave output signal **208**.

The rectified half wave signals are selectively connected to the microprocessor **102** through optical isolators **103** as parameter select signals as either the full cycle 24 VAC supply voltage **200**, the positive half wave output signal **204**, the negative half wave output signal **208** or no signal is interfaced with the microprocessor **102**. Thus, field selection consists of connecting each of four of the optical isolators

103 to one of four field select lines 210, 212, 214, 216 to provide one of the above four signals as an input to microprocessor via the optical isolators 103. This is equivalent to having four selection switches, each with four positions.

The PNV memory 120 stores at a particular address a set of operating parameters for the system 100 corresponding to a defined air flow rate. The microprocessor 102 reads the particular address in the PNV memory 120 corresponding to the air flow rate selected by the parameter select signals. The operating parameters stored at the particular address are used by the microprocessor 102 to control fan speed in response to compressor speed and desired heat output. Microprocessor 102, thus, calculates appropriate air flow rates for given configurations of system 100 from the parameter select signals.

FIG. 3 shows a preferred embodiment of circuit for providing the system control signals to microprocessor 102 according to the present invention. The microprocessor 102 controls the ECM 114 in response to a number of system control signals provided by system control 104 such as a temperature signal provided by a thermostat. Other system control signals include a blower activating command, an electric heat command, first and second stage compressor commands, a reversing valve command and a humidistat low humidity signal. The microprocessor 102 defines an operating mode for the ECM 114 in response to the system control signal. The ASIC 112 executes system control commands. In one embodiment, the ECM 114 can respond to six 24 volt AC signals. Six system interface lines (not shown) may be connected directly to a low voltage terminal board (not shown) of the indoor unit. A variation of the "diode duplexing" concept used in field selection is implemented with the ECM 114 for providing the system control signals to the microprocessor 102.

A number of diodes, such as diodes 301 and 303 are configured in bipolar diode pairs, such as pair 304, as shown in FIG. 3, and a low voltage alternating current (AC) supply voltage is selectively applied to the diodes 301 and 303. Each bipolar diode pair 304 provides a composite output signal from node 305 to the optical isolators 103, the output of which is directly presented to microprocessor 102. The composite output signal is a half wave signal only when either diode 301 or diode 303 of the pair 304 receives the AC supply voltage and is a full wave signal when both diodes 301 and 303 of the pair 304 receive the AC supply voltage.

An operator may selectively apply the AC reference voltage by mechanically opening or closing switches 307 and 309, such as in a thermostat, connected in series with diodes 301 and 303, respectively. Alternatively, switches 307, 309 may be electronically controlled by system control 104. Table 1 shows the composite output signal which would be provided to the microprocessor for different configurations of switches 307 and 309.

TABLE 1

| 307 | 309 | COMPOSITE OUTPUT |
|---|---|---|
| Open | Open | No signal |
| Open | Closed | Negative Half-wave |
| Closed | Open | Positive Half-wave |
| Closed | Closed | Full Cycle |

Resistors 311 and 313 may be placed in series with diodes 301 and 303, respectively, to limit power dissipation by limiting current in diodes 301 and 303.

FIG. 4 shows a schematic of portions of the block diagram of FIG. 1. Microprocessor 102 receives via optical isolators 103 the system control and parameter select signals. PNV memory 120 stores various system parameters which are used by microprocessor 102 to determine operation of motor 114. In one preferred embodiment, power switches 124 are illustrated as an inverter bridge having a positive bus 402 and a negative bus 404 supplied by a power supply (not shown). Preferably, power switches 124 are activated in pairs; one switch is closed for each winding of motor 114 to be energized. Power switches 406 and 407 correspond to phase A. Power switches 408 and 409 correspond to phase B. Power switches 410 and 411 correspond to phase C. Power switches 406–411 are driven by drivers 416–421 (see FIG. 26), respectively, in response to drive signals provided by ASIC 112. The excitation scheme for ECM 114 involves three-phase excitation with trapezoidal current excitation. This may involve the use of a three-stage full-bridge inverter employing six switches, such as power switches 406–411, and a flyback diode coupled in an anti-parallel relationship with each switch of switches 406–411. In the preferred embodiment, the anti-parallel diodes (not shown) are included in switches 406–411. Two switches are commanded on during each motoring interval, one from the upper set of switches 406, 408, 410 and one from the lower set of switches 407, 409, 411. Current flows in only two of the three motor phases during each excitation interval.

As illustrated in FIG. 4, current control circuit 129 includes overcurrent protection circuit 129A, which provides input signals to both microprocessor 102 and ASIC 112, and current regulator 129B providing an IREG signal to ASIC 112 in response to a current reference signal (IREF) provided by ASIC 112 and a signal representing motor phase current sensed in a resistive shunt 430 having resistors Rsh1 and Rsh2 and providing outputs S0, S1 and S2. A back EMF sensing network 126A is part of position sensing network 126 shown in FIG. 1. The position sensing and current control features are described below.

The ASIC 112 also provides voltage signals shifted from 5 volts to 10 volts for driving the power switches 406–411. In the preferred embodiment illustrated, the plurality of gate drives 416–421 drive the gates of the power switches 406–411. Gate drives 416–421 condition the signals provided via line 131 from ASIC 112 for optimal operation of switches 406–411 by adjusting their switching speed.

Phase currents of the ECM 114 can be sensed using shunt resistors, current transformers, Hall-effect current sensors or other sensors or circuits. In the embodiment illustrated, a shunt resistor 430 is placed on the negative DC bus 404 which supplies the power switches 406–411. Referring to FIG. 4, motor phase currents are sensed by shunt resistor 430 and only flow through the resistor 430 when power is being exchanged from the supply 402 to motor 114 and vice versa. The shunt 430 does not detect circulating currents involving more than one motor phase.

Current in the windings of ECM 114 is compared to a reference current signal (IREF) provided by ASIC 112. The comparison results in a signal being input to ASIC 112 to execute current regulation. In a preferred embodiment, cycle-to-cycle current regulation is utilized by circuit 129B. Circuit 129B provides a frequency determined by the ASIC 112 during the current regulation cycle. Gate drives 416–421 energize two of the power switches 406–411, such as switches 416 and 419, at the beginning of a PWM cycle. This allows the current in the windings of motor 114 to increase until reaching a threshold value set by the reference current (IREF). At this instant, one or both of the power switches 416, 419, for example, are turned off causing motor phase current to decay. Such switches remain off until the

beginning of the following PWM cycle, thus, completing one regulation cycle. In particular, ASIC **112** defines reference current (IREF) which is input via line **429** to a comparator **432**. The reference current is first converted from a digital signal to an analog signal by a D/A converter **435**. Comparator **432** compares the motor phase current sensed on the shunt **430** via line **438** with the analog of the reference current provided by line **429**; the output of comparator **432** is logic level low when motor current exceeds reference current. Since motor torque is proportional to current, the ASIC **112** controls the torque of the motor **114** in response to the difference between the detected motor phase current and the reference current.

Referring to the block diagram of the ASIC **12** illustrated in FIG. **5**, ASIC **112** controls the ECM **114** for air moving applications. ASIC **112**, among other things, senses the rotor position of the ECM **114**, controls torque by a motor phase current control and provides high level voltage gate drive signals to control power switching devices.

A master oscillator **502** (shown in more detail in FIG. **16**) generates a clock signal which synchronizes the timing of the operation of the various portions of the ASIC **112**. ASIC **112** provides the clock signal to microprocessor **102**. Further, an interface between the ASIC **112** and the microprocessor **102** consists of several input/output data lines shown in the block diagram of FIG. **5**. In the preferred embodiment, three input lines form a serial interface with ASIC **112**. The interface provides serial communication to the ASIC **112** of a current reference signal (IREF), a direction of rotation command (FR), a blanking signal (IBLK) and a frequency selection signal (FS). Other signals include an angle advance (ADV), a fast/slow commutation PWM mode (FM) and an overcurrent reset signal (RS). Register **504** stores data serially loaded in the microprocessor **102**.

The ASIC **112** also provides data to the microprocessor **102**. The ASIC **112** resets microprocessor **102** when the clock signal (DATA-CLK) from the microprocessor **102** is absent for a predetermined interval of time. This is accomplished by a microcontroller watchdog circuit **507** (shown in more detail in FIG. **24**). The ASIC **112** provides a reset signal to microprocessor **102** during system power up. Also, ASIC **112** provides an overcurrent latch output which can be read by microprocessor **102** to determine whether an overcurrent condition exists. ASIC **112** also provides a motor speed signal via line **554** to microprocessor **102**.

ASIC **112** also includes various control circuits. A current reference circuit **510** (shown in more detail in FIG. **22**) associated with the current reference signal (IREF) from microprocessor **102**. An overcurrent protection limit **515** (shown in more detail in FIG. **20** as a trip latch) for detecting current conditions above a certain limit and an undervoltage detector **513** (shown in more detail in FIG. **14**) for detecting undervoltage conditions may also be a part of ASIC **112**. In one preferred embodiment, an undervoltage condition is defined as less than 8.5 volts in a drive circuit having an input voltage supply of 10 volts and a stable regulated output of 5 volts. In the event of an undervoltage condition occurring for a predetermined interval of time, the ASIC **112** resets the microprocessor **102**. Overcurrent protection circuit **129A** and overcurrent limit **515** provide the drive circuit with redundant overcurrent information. In the event of an overcurrent condition, the ASIC **112** disables the motor **114**. ASIC **112** also includes a level shifter circuit **518** (shown in more detail in FIG. **15**) and a current blanking circuit **516** (shown in more detail in FIG. **21**) which allow microprocessor **102** to differentiate an actual overcurrent signal from a false one caused by noise in the circuit.

A PWM frequency selector **519** (shown in greater detail in FIG. **17**) selects the frequency at which ECM **114** is pulse width modulated. Selector **519** is responsive to the frequency select (FS) signal provided via line **521** which selects a pseudo-random PWM frequency generator **524** (shown in more detail in FIG. **16**) which provides a PWM signal via line **529**. In the preferred embodiment, four frequencies are available: f8=18.6 kHz, f8.3=6.2 kHz, f10=4.6 kHz and FR=pseudo random frequency. Selector **519** controls operation of the motor **114** by selecting a frequency of modulation for the pulse width modulating of the voltage applied to the motor **114**. Relatively low PWM frequencies (e.g., frequencies less than 20 kHz) tend to generate acoustic noise audible by humans due to the natural resonant frequency of the various components of system **100**. Higher PWM frequencies, however, cause greater heat dissipation problems in inverter power switches **124**. Excessive heating is especially a problem in compact drives. The pseudo random PWM frequency generator **524** reduces the effect of acoustic noise generated by the ECM **114** allowing operation at lower PWM frequencies. The ASIC **112** continuously and pseudo-randomly varies the PWM frequency within a predefined range to reduce the annoying effects of single tone acoustic noise. In one preferred embodiment of the invention, the PWM frequency signal produced by selector **519** via line **529** is controlled by the frequency select signal (FS) provided by microprocessor **102** via line **521** and by a random sequence of numbers provided by generator **524** via line **526**. As a result, the PWM frequency can be controlled from a frequency select signal provided by microprocessor **102**. Data stored in PNVM **120** determined whether the PWM frequency is a fixed frequency or a variable frequency from a pseudo random sequence of numbers from generator **524**.

Selector **519** may be a multiplexer circuit as described below. The function of the selector **519** can be expressed by the following equation:

$$fRND=fi*(N/16)\ (N=0, 15)$$

where fRND, is the PWM frequency, fi is the input frequency to a binary rate multiplier (see FIG. **8**), and N is binary number generated in a pseudo random manner. The selector **519** selects a PWM frequency from four available frequencies (f8, f8.3, f10, fR). A two bit signal (FS) is used to select frequency. The pseudo random frequency (fRND) is generated by a random number generator and the binary rate multiplier.

Referring to FIG. **5**, rotor position sensing circuit **530** includes a back EMF selector circuit **541** (shown in more detail in FIG. **18**) for selecting the motor phase voltage to be analyzed according to the state of the power switches **124**. Selector **541** responds to the zero crossing detector signal provided via lines **127** by the position sensing circuit **126** (FIG. **1**) such as back EMF sensing network **126A** (FIG. **4**). The digital signal representing selected motor phase voltage is provided to a flyback voltage detector **535** (see FIG. **25C**) which detects the proximity of a zero crossing. Detector **535** enables a back EMF sampling circuit, such as zero crossing signal detector **538** (see FIGS. **25A** and **25B**), to initiate the zero crossing detection.

ASIC **112** includes a current regulating circuit (see FIG. **20**), a commutation logic circuit (including a bidirectional state machine) and back EMF decoder **517** (see FIG. **13**) which is a circuit for generating the commutation logic for the system **100**. The commutation logic consists of a state machine which operates in response to the direction of rotation command (FR). The states are incremented or

decremented in response to a commutation signal (CMM) which is generated by a commutation instant estimator circuit **550** (see FIG. **25C**) responsive to the zero crossings detected by detector **538**. The commutation signal (CMM) indicates the time instant for commutation of a motor phase. The back EMF decoder indicates the pair of the power switches **124** which are active during each state. Thus, two of the three phases of the motor **114** are active at any given time according to the state of sensed back EMF voltage. In one preferred embodiment, the circuit **517** has eight states and is designed in such a way that two of its eight possible states are forbidden (0 and 7). If these states are present when the system **100** is activated, it forces itself immediately to state one. Each state is decoded by the back emf decoder circuit. Two of the six power switches **124** are associated with each state so that at any time instant only two of power switches **124** are commanded on causing the energization of two of the three motor **114** phases.

The rotor position sensing circuit **530** of ASIC **112** also includes a drive watch dog or underspeed detector **532** (shown in more detail in FIG. **19**). Detector **532** constantly monitors the ECM **114** rotor speed within each commutation interval and disables the motor **114** when rotor speed falls below a threshold speed. Since motor speed is compared to a threshold during every commutation interval, detector **532** also functions as stall detection circuitry.

The commutation instant estimator circuit **550** and an adaptive blanking circuit **553** (see FIGS. **23** and **25C**), which is also a part of the rotor position sensing circuit **530**, will be discussed in more detail below.

One aspect of ASIC **112** is shown in greater detail in FIG. **6**. FIG. **6** illustrates a block diagram of the current blanking circuit **516** (shown in greater detail in FIG. **21**). The diode recovery current, present after one of the power switching devices **124** is commanded on, causes erroneous current information in the current regulator comparator **432** in the form of a current spike. The amplitude of this current spike can be several times higher than the current level to be regulated. Blanking ignores the erroneous current information from current comparator **432** caused by the diode recovery current. A high to low transition of the current comparator **432** output reflects the presence of current spikes triggering a blanking time interval block **601**. The width of the interval is selectable by input N via line **604**. The generated blanking interval is propagated through a gate G1 if its occurrence is within a time interval, or window, of duration W as indicated by reference character **607**. The window **607** is initiated at the beginning of the regulation cycle when the switches **124** are turned on. A gate G2 modifies the information from current comparator **432** by preventing the propagation of the low state of comparator **432** when the blanking signal from the blanking time interval block **601** and the window time interval signal **607** are present. The high to low transition of the output of gate G2 via line **610** during a window interval represents a true overcurrent signal and terminates the PWM current regulation cycle.

If the current regulate signal (low state) via line **609** occurs after the window interval of **607**, then the signal is interpreted as a true current regulate signal and no blanking interval is generated. The action taken by an ASIC **112** current regulator in the presence of a current regulate signal via line **610** is to immediately terminate the PWM cycle.

The present invention includes blanking means rather than using filters to reduce the effects of erroneous information from the current comparator **432**. Turning on and turning off events of power switches **124** cause current spikes due to the nature of semiconductor devices. Conventional techniques to reduce the effect of the current spikes require the use of low pass filter arrangements. The filtering of the current information from the shunt **430** is usually done before it is compared against the current reference by comparator **432**. The time constant associated with a filter reduces the performance of the current comparator circuit **129B**, particularly at low current levels.

Without blanking, a positive current spike at turn-on of switches **124** causes erroneous information about the motor phase current which prematurely terminates the current regulation PWM cycle, thus, causing a drop in phase current and a drop in torque. Blanking ignores the erroneous current information from current comparator **432** caused by the diode recovery current. A negative current spike at turn-off has no effect in this embodiment of the present invention since by the time of its occurrence, the PWM regulation cycle is already terminated.

Referring to FIG. **7**, one aspect of the ASIC **112** is shown in greater detail in block diagram form. The reference current circuit **510** generates a digital signal representing a reference current of constant frequency and variable duty cycle generated by digital comparator **701** and flip flop **704** having a clock signal via line **710**. In one preferred embodiment of the invention, digital comparator **701** may comprise ten exclusive NOR gates (see FIG. **22**). One input signal to each XNOR gate is a bit from a ten-bit binary number representative of a desired maximum current magnitude. The binary number corresponds to a signal of a particular duty cycle, of which the analog equivalent is compared to phase current. The other input signal to each XNOR gate is one of ten signals of different frequencies. A logic level high output signal from the XNOR gates indicates that both input levels are the same. The outputs of each XNOR gate are connected to a NAND gate, the output signal of which is at a low level when the state of all individual comparators (i.e., each XNOR gate) is at logic level high indicating the occurrence of a match. The output of the multiple input NAND gate is connected to the reset input of flip flop **704** via line **707**, thus, causing flip flop **704** to go to a low level until the next clock signal via line **710**. The output signal of flip flop **701** is of constant frequency, as determined by the frequency of the clock signal via line **710**, and of variable duty cycle, as determined by which 10-bit binary number is selected.

The PWM current reference signal is passed through a D/A converter **435** functioning as a low pass filter (outside the ASIC **112**) and its output voltage is fed into analog comparator **432** for comparison with the voltage developed across shunt **430** (see FIG. **4**).

The variable duty cycle signal generated by digital comparator **701** can also be used to synchronize new data that has previously been loaded into ASIC **112** from microprocessor **102**.

Referring to FIG. **8**, pseudo random number generator **524** (see FIG. **16**) of ASIC **112** is shown in greater detail in block diagram form. Random number generator **524** may consist of a 16-bit closed loop shift register shown as integrated circuit blocks IC**6** and IC**7**. The shift register is advanced or clocked at an input frequency fSHIFT. Gates IC**4** and IC**5** provide feedback and initialization of the shift register **5241**.

A four-bit binary rate multiplier **5191** may be commanded by 16 possible binary combinations of N. Four binary numbers (corresponding to 0 through 3) are forbidden. Thus, ASIC **112** implements a mapping circuit in the form of IC**2** and IC**3** to provide the following relationship:

$A=A'$, $B=B'$, $C=C'$ and $D=\overline{(C'+D')}+D'$

where A', B', C' and D' are outputs of the shift register circuit IC6 and IC7 and A, B, C and D are inputs to the binary rate multiplier **5191**.

The mapping prevents the PWM frequency from being too low causing substantial loss in current which would result in a loss in torque and possibly a loss of rotor synchronism.

Referring to FIG. **9**, the system **100** includes means for sensing the position of the rotatable assembly of the motor **114** such as a back EMF sensing network **126**A. The position sensing network **126**A senses the back EMF to provide a zero crossing detector signal (ZCA, ZCB, ZCC) to which ASIC **112** responds. The network **126**A senses rotor position as a function of zero crossings of the difference between the back EMF voltage of windings of the motor **114** as compared to a reference level Vn' developed by a resistive network functioning as a voltage divider. ASIC **112** generates power switching control signals for power switches **124** in response to such position sensing.

In one preferred embodiment, the ECM **114** rotor position sensing network **126**A is employed with a motor with star connected windings and with 120 degree conduction intervals. Two of the three motor windings are energized at any given time developing torque. The third winding is used for position sensing by observing the motor phase back EMF waves when current in the selected phase has decayed to zero.

The back EMF voltage waves are conditioned to a signal level using a voltage divider network as shown in FIG. **9**. Back EMF sensing network **126**A conditions the motor phase voltages Va, Vb, and Vc to signals Va', Vb', and Vc' for phases A, B, and C, respectively. A conditioned signal for the motor neutral voltage (Vn') is artificially generated as a reference level as a function of the conditioned signals of phases A, B, and C. If a neutral voltage (Vn) is available, its conditioned signal may be obtained in similar fashion to the other motor phases. Signals Va', Vb', and Vc' are compared against signal Vn' by comparators CA, CB and CC, respectively. Digital level high at the output of the comparators indicates that a phase's back EMF voltage magnitude is less than the neutral voltage. Conversely, a low level indicates that a phase's voltage magnitude is greater than the neutral voltage. The digital representation of back EMF voltages at the output of the comparators CA, CB or CC which indicates the polarity of the back EMF voltages is shown in FIG. **9** as ZCA, ZCB, and ZCC for phase A, phase B, and phase C, respectively. In the absence of pulse width modulation in the inverter power switches **124**, the signals from the comparators CA, CB and CC are square waves except for a short time interval after each commutation. In presence of a PWM signal, noise generated during switching events of the power switches **124** deteriorates the signal from comparators CA, CB and CC to the extent that it cannot be used without further processing. If low pass filters are used to eliminate the noise effects generated by the PWM action, however, the motor **114** high speed performance deteriorates because the filter time constant affect the angle at which commutation takes place.

Detecting the time instants of the zero crossing of the back EMF waves consists of sampling the back EMF voltage waves during periods when the noise generated by turning on and turning off events of the enabled power switches **124** is at a minimum. Turning power switches **124** on or off generates current spikes by the recovery of semiconductor switching devices. The transient voltages generated by these spikes cause erroneous information on the conditioned signals Va', Vb', Vc' and Vn' as well as on the zero crossing detection. The system **100** samples the comparator CA, CB or CC output of the selected motor phase, A, B or C, before the turning on event takes place. There is a time delay from the instant one of the power switches **124** is commanded on to the instant the switch actually turns on. When pulse width modulation is being executed, the back EMF sampling instances coincide with the beginning of the PWM cycle. If the PWM frequencies are synchronized, the sampling frequency may be selected to be the same for all the PWM frequency modes of the motor **114**.

The turning off effect of power switches **124** is eliminated by disregarding the sample of back EMF which is sampled at the time a pair of power switches **124** is turned off or during an interval immediately after the turn off occurrence. This interval is long enough for the effect of the turning off to be extinguished. Circuit **126**A detects the change in state of the sampled values of the back EMF. This change of state represents the zero crossing of the phase back EMF. At turn off, a time interval (OCW) is initiated. If the back EMF from comparator CA, CB or CC is sampled during this time interval, then, the sampled information is ignored.

The voltage of the selected motor phase back EMF immediately after the motor **114** winding is commutated off is referred to as a flyback voltage. The output of the flyback voltage circuit **535** is kept at a defined level for the duration of a blanking interval. As soon as the output of a comparator CA, CB or CC of the selected back EMF phase indicates a positive transition (indicating the proximity to a zero crossing and the output (low level) of flyback detector circuit **535** changes state enabling the zero cross sampling circuit **538**. High level output of circuit **535** keeps the sampling circuit **538** in a reset state, thus, allowing back EMF sampling only in an interval near the zero crossing occurrence. This helps eliminate the effect of noise when a zero crossing is not expected.

FIG. **10** shows a schematic of a zero crossing detection circuit **538** (shown in more detail in FIGS. **25**A and **25**B) of ASIC **112** employing synchronous sampling. The back EMF selector **541** embodied as a multiplexer (MUX) (see FIG. **18**) takes information from the zero cross comparators CA, CB or CC and selects the phase of motor **114** of which the zero cross signal's proximity to zero is expected as indicated by signals SA, SB, SC provided by decoder **517** (see FIG. **13**). Selector **541** ensures that the polarity of the selected zero crossing signal is always the same regardless of the transition to zero of the back EMF waves. Flip-flop IC **1005** samples this signal via line **1008** provided that a blanking signal (BLK) is logic level low to indicate that it is not a blanking interval. At the positive going transition of the sampling frequency (fS), the information sampled and saved in IC **1005** is transferred to IC **1011**. At the following cycle, new information is sampled and stored in IC **1005**. If this new information is different from the previous sample stored in IC **1011**, gate **1014** changes its state indicating the occurrence of a zero crossing; if not, the sampling process continues. If the selected zero crossing signal is sampled within the interval in which the overcurrent window (OCW) signal is at low level the sampled information is ignored by copying the information stored in IC **1011** to IC **1005**. This prevents the zero crossing detection gate **1014** from being activated in presence of information that may be erroneous.

The occurrence of the zero crossing initiates a counter (shown in more detail in FIG. **23**) for measuring the elapsed time between zero crossings. The ASIC **112** controls commutation as a function of the elapsed time. The signals from the back EMF comparators CA, CB and CC (ZCA, ZCB,

and ZCC) are combined into one signal representing the composite back EMF signal for the three phases. Back emf selector **541** (see FIG. **18**) selects the motor phase voltage to be analyzed according to the state of the power switches **124** as commanded by the commutation logic output of decoder **517** in FIG. **13**. The motor phase to be analyzed is the one that is not producing torque, i.e., is not conducting current.

The commutation instances of a motor **114** phase are determined from the information from the zero crossings of that phase. Torque production in a phase of motor **114** is determined by the current circulating in that motor phase. At low speeds, for example, it is convenient to energize a winding of motor **114** when it is experiencing maximum rotor flux. That is, the motor **114** phase must be energized **30** electrical degrees after the zero crossing. At high speeds, it is convenient to energize the motor **114** before the particular winding is exposed to the maximum rotor flux. This permits phase current to build up in the presence of higher motor impedance and higher opposing back EMF.

Referring to FIG. **11**, commutation consists of determining the time interval between two consecutive zero crossings of the motor back EMF waves and the time instant a motor phase is commutated. FIG. **11** depicts a preferred commutation strategy. The zero crossings ZC at intervals N–1, N, N+1 and N+2 of FIG. **11**(*a*) as detected by the zero crossing signal detector circuit **538** are indicated as narrow digital level signals. FIG. **11**(*b*) indicates the analog equivalent output of zero crossing counters starting from zero count at the beginning of a zero cross signal ZC(N1) at time (N–1) and ending at the occurrence of another zero cross signal ZC(N) at time (N). The state of the counters at this instance CNT(N) indicates the time interval between two consecutive zero crossings of the back EMF waves. This time interval is equivalent to the angular position of 60 electrical degrees. The commutation instant CMM(N) of FIG. **11**(*d*) is estimated by circuit **550** which uses the time interval of the immediate past zero crossing interval CNT(N) as follows. At the time of the occurrence of ZC(N), the information between the two consecutive zero crossings CNT(N) is saved and the counters are reset to zero to start measuring the following zero crossing interval ZC(N+1). The saved information is loaded into a set of binary counters which count down starting from the loaded count down towards zero count. The frequency of the down counters is variable and higher than that of the incrementally counting zero cross counters. The first zero count of the down counters indicates the commutation instant time CMM(N). The angular distance from the occurrence of the zero crossing to the time the next commutation takes place is referred to here as commutation angle. This angle is determined by the initial count and the frequency at which the down counters are clocked. The flexibility in changing the commutation angle allows optimum commutation of the motor phases. Four bits loaded serially from microprocessor **102** select the angle by selecting a frequency at which the down counters operate. Changing the commutation angle according to changes in motor speed optimizes the drive performance of ECM **114**. After the commutation, the down counters are loaded again with the same zero cross interval count previously saved. The time interval between the time a commutation takes place and the time instant the last down count of the down counters reaches zero is the blanking interval (BLK). Reloading of the down counters may occur several times for larger blanking intervals as referred to as adaptive blanking **553**. FIG. **11**(*c*) shows blanking intervals (i.e., BLK1, BLK2 . . . ) which are made from various reloading of the down counters. The blanking interval prevents the use of information from the zero crossing comparators CA, CB and CC immediately after a motor **114** winding is commutated and the inductive current in this phase is decaying to zero. The system **100** can provide a blanking interval which adapts inversely proportional to the advance angle. Therefore, microprocessor **102** constitutes means for blanking as a function of the interval between zero crossings and commutation with zero crossings in the interval following commutation being ignored. Microprocessor **102** may vary the length of the blanking interval.

At standstill, where there is no back EMF voltage available, an open loop stepping sequence which sequentially steps the commutation logic **517** in the selected direction of rotation is initiated. Two of the three phases of **114** motor are energized at each time interval and the logic **517** is rotated at a fixed frequency set by the overflow of the zero cross counters (15 RPM for a 12 pole ECM). As soon as the rotor of shaft **116** moves in response to the stepping action, the zero crossing detection circuit **538** starts observing the zero crossing of the back EMF waves. If a zero crossing is found, the open loop sequence is automatically overridden so that the back EMF sensing scheme smoothly takes over control of the power switches **124** commutation sequencing. If no zero crossing is found, the open loop sequence continues rotating the state machine of commutation logic **517** at the same speed until a zero crossing is found. Further, the stepping action is accompanied by a linear increase, or ramp, in the current reference. The minimum and maximum values of the current reference and the duration of the ramp are a predetermined function of the inertia of the load and the acceleration required. Large inertia loads may require a different current profile while stepping action is executed.

Referring to FIG. **12**, commutation is shown in the form of a timing diagram for the forward sequence. FIG. **12**(*a*) shows an idealized representation EA, EB and EC of the back EMF voltages for phases A, B and C of motor **114**. FIG. **12**(*b*) shows the outposts of comparators CA, CB and CC. Slow and fast commutation schemes are used in the preferred embodiment of the invention. Slow commutation, where only one of power switches **124** executes PWM at any given instant, is shown in FIG. **12**(*c*) by the states of gate drives **130**. A high logic level indicates that the corresponding power devices **124** are on (closed switch) and a low logic level indicates that the corresponding power devices **124** are off (open switch). FIG. **12**(*c*) also indicates which motor phases are energized and which phase is being used to detect back EMF for rotor position sensing. Additionally, FIG. **12**(*c*) shows the relationship between the commutation and the states of commutation logic **517**. FIG. **12**(*d*) shows the digital signals used to select the proper back EMF signal for sensing including the composite back EMF output signal (CMP) for obtaining zero crossings, the polarity adjustment signal R and the zero cross signal. Signal CMP at the position sensing MUX **541** represents the selected back EMF signal being observed (ZCA, ZCB, ZCC).

Referring to FIG. **12**(*c*), at 0°, reference character **1201** indicates that the B phase of motor **114** is conducting as gate drive **418** is driving power switch **408**. Switch **408** is executing PWM. At **1204** the C phase is energized by driver **421** driving switch **411**. The A phase is used for back EMF sensing at this time. The C phase is opened at reference **1207** and the A phase is closed at reference character **1210**. PWM is now being executed on switch **407** and no longer on switch **408**. From 0° to 60° indicates state **5** of the state machine of commutation logic **517**. With the A phase energized, the B phase is opened at **1213** and the C phase energized at **1216**. Note that two phases are energized at each instant.

In view of the above, it will be seen that the several objects of the invention are achieved and other advantageous results attained.

As various changes could be made in the above constructions without departing from the scope of the invention, it is intended that all matter contained in the above description or shown in the accompanying drawings shall be interpreted as illustrative and not in a limiting sense.

What is claimed is:

**1**. A system for driving a component of a heating ventilating, and/or air conditioning (HVAC) system in response to a system control signal provided by a central means, said system comprising:

a motor having a stationary assembly and a rotatable assembly in magnetic coupling relation to the stationary assembly, said rotatable assembly in driving relation to the component, said motor driving the component in response to a control signal;

a programmable memory for storing parameters representative of the system;

means for receiving a parameter select signal for selecting at least one parameter stored in the memory;

means, including a microprocessor responsive to the selected parameter and to the system control signal, for generating control signals to control motor speed or torque as a function of the selected parameter and the system control signal; and

an instruction memory for storing instructions controlling the operation of the microprocessor.

**2**. The system of claim **1** further comprising means for providing a parameter select signal to the means for receiving a parameter select signal.

**3**. The system of claim **2** wherein said means for providing a parameter select signal includes means for rectifying an AC supply voltage.

**4**. The system of claim **3** wherein said means for rectifying includes a positively biased diode for receiving the AC supply voltage and providing a positive half wave output signal, a negatively biased diode for receiving the AC supply voltage and providing a negative half wave output signal and means for selectively connecting to the parameter select signal receiving means either the AC supply voltage or the positive half wave output signal or the negative half wave output signal.

**5**. The system of claim **1** further comprising means for defining an air flow rate responsive to the parameter select signal.

**6**. The system of claim **5** wherein said means for defining an air flow rate comprises means for addressing the memory to select a set of operating parameters for the system corresponding to the defined air flow rate.

**7**. The system of claim **6** wherein said operating parameters include information corresponding to motor speed or torque.

**8**. The system of claim **7** further comprising means for selecting stored parameters responsive to the system control signal.

**9**. The system of claim **1** wherein the memory for storing parameters comprises a programmable, non-volatile memory.

**10**. The system of claim **1** further comprising means for interfacing the system control signal with said microprocessor.

**11**. The system of claim **10** wherein said means for interfacing the system control signal comprises a plurality of diodes configured in bipolar diode pairs for selectively receiving an alternating current (AC) supply voltage, each bipolar diode pair providing a composite output signal to said microprocessor, whereby the composite output signal is a half wave signal when only one diode of the pair receives the AC supply voltage and is a full wave signal when both diodes of the pair receive the AC supply voltage.

**12**. The system of claim **1** further comprising means for selecting stored parameters responsive to the system control signal.

**13**. The system of claim **1** further comprising means for receiving a mode signal for selecting at least one parameter stored in the memory wherein the mode signal is a pulse width modulated system control signal having a particular duty cycle for indicating a desired mode of operation of the motor and wherein the selected parameter is representative of the mode of operation and wherein the control signal generating means is responsive to the selected parameter.

**14**. The system of claim **13** wherein the mode signal indicates variable speed or torque operation of the motor and the duty cycle of the mode signal corresponds to the desired motor speed or torque.

**15**. The system of claim **1** wherein the memory comprises a nonvolatile memory for storing calibrating parameters representative of operation of said motor driving a predetermined load and wherein the control signals generated by said microprocessor are a function of the calibrating parameters.

**16**. The system of claim **15** wherein the calibrating parameters include a current offset and a multiplier.

**17**. The system of claim **1** wherein the memory comprises a nonvolatile memory for storing calibrating parameters representative of operation of said motor driving no load and wherein the control signals generated by said microprocessor are a function of the calibrating parameters.

**18**. The system of claim **17** wherein the calibrating parameters include current offset and a multiplier.

**19**. The system of claim **1** wherein said memory stores parameters representative of an operation of said motor, said motor being in combination with the HVAC system.

**20**. The system of claim **19** wherein the stored parameters represent the difference between the actual torque generated by the motor and the nominal values thereby representing the combined inaccuracies of the motor in combination with the HVAC system.

**21**. The system of claim **19** wherein the parameters correspond to a constant CFM calibration.

**22**. The system of claim **1** further comprising means for sensing a position of the rotatable assembly and providing a position signal to the microprocessor, said microprocessor responsive to the position signal.

**23**. The system of claim **1** wherein the memory comprises an EEPROM having one or more of the following parameters stored therein: speed or air flow rate for various operating modes such as a heating mode and a cooling mode; speed or air flow rates for different system capacities such as tons of cooling and kilowatts of heating; parameters defining turn-on and turn-off time delays; parameters defining motor speed or torque changes over time; parameters defining the relationship between motor torque and air flow; parameters defining the relationship between motor speed and air flow; parameters defining a rate of linear increase in current for smoothly starting the motor; and parameters defining direction of rotation; and wherein the control signals generated by the microprocessor are a function of at least one of the stored parameters.

**24**. The system of claim **1** wherein the memory includes a parameter stored therein which is representative of a

correction factor for correcting tolerance inaccuracies of the motor and wherein the control signals generated by the microprocessor are a function of the correction factor.

**25**. The system of claim **1** wherein the memory includes a parameter stored therein which is representative of a difference between the actual current being delivered to the motor and the expected nominal current and wherein the control signals generated by the microprocessor are a function of the difference.

**26**. The system of claim **1** wherein the rotatable assembly includes a rotor and wherein the memory includes a parameter stored therein which is representative of a compensation factor for compensating for torque variation caused by the magnetization level of the rotor and wherein the control signals generated by the microprocessor are a function of the magnetization level compensation factor.

**27**. The system of claim **1** wherein the memory includes a parameter stored therein which is representative of a difference between the actual torque being delivered to the motor and the expected nominal torque and wherein the control signals generated by the microprocessor are a function of the difference.

**28**. The system of claim **1** wherein the memory includes a parameter stored therein which is representative of a difference between the actual speed of the motor and the expected nominal speed and wherein the control signals generated by the microprocessor are a function of the difference.

**29**. The system of claim **1** wherein the memory includes a parameter stored therein which is representative of a difference between the actual power input into the system and the expected nominal power and wherein the control signals generated by the microprocessor are a function of the difference.

**30**. The system of claim **1** wherein the stationary assembly includes windings and further comprising power switching means for selectively providing power to the windings and an application specific integrated circuit (ASIC) connected between the microprocessor and the motor for generating a signal corresponding to the control signals for controlling the power switching means.

**31**. The system of claim **30** further comprising means for sensing the position of the rotatable assembly and wherein said ASIC generates the power switching control signals in response to the position sensing means.

**32**. The system of claim **31** wherein the motor comprises an electronically commutated salient pole motor and the position sensing means comprises means for sensing the back electromotive force (EMF) of the stationary assembly.

**33**. The system of claim **32** further comprising means for sensing the position of the rotatable assembly as a function of zero crossings of the difference between the back EMF voltage of windings of the motor as compared to a reference level and wherein said ASIC commutates power to the motor windings as a function of the zero crossings.

**34**. The system of claim **33** wherein the position sensing means includes means for sensing the back EMF in a selected one of the windings during periods after which inductive current in the selected winding has decayed.

**35**. The system of claim **33** wherein the position sensing means includes means for sensing the back EMF in a selected one of the windings during periods when the noise generated by switching events of the power switching means is at a minimum.

**36**. The system of claim **33** wherein said means for sensing the back EMF in a selected one of the windings includes means for sensing voltage during periods when the selected winding is unenergized and during periods when the back EMF approximates the reference level.

**37**. The system of claim **33** wherein said means for sensing the back EMF in a selected one of the windings includes means for measuring time elapsed between the zero crossings and means for commutating power to the motor windings as a function of the measured elapsed time.

**38**. The system of claim **37** wherein said means for measuring time elapsed between the zero crossings comprises a counter incrementally counting between the zero crossings and said means for commutating initiates a subsequent commutation event after a predetermined number of counts.

**39**. The system of claim **38** further comprising means for blanking the sensed back EMF as a function of the interval between the zero crossings and the commutation events and wherein the blanking means disregards the zero crossings in an interval following a commutation event.

**40**. The system of claim **39** wherein the blanking means includes means for varying the length of the commutation interval.

**41**. The system of claim **33** wherein the position sensing means includes means for generating the reference level as a function of the voltage of each of the windings.

**42**. The system of claim **41** wherein said means for generating the reference level comprises a voltage divider connected to each of the windings.

**43**. The system of claim **30** wherein the ASIC includes means for generating a direction of rotation command signal and wherein the power switching means includes means for commutating the motor windings responsive to the direction of rotation command signal generated by said ASIC.

**44**. The system of claim **30** further comprising means for pulse width modulating the power being provided to the windings of the motor and wherein said ASIC includes means for selecting a frequency of modulation of the pulse width modulating means.

**45**. The system of claim **44** wherein said means for selecting a frequency of modulation includes means for defining a plurality of frequencies and means for pseudo-randomly selecting one of the plurality of frequencies for the frequency of modulation whereby acoustic noise during motor operation is reduced.

**46**. The system of claim **30** wherein said ASIC includes means for defining a reference current, means for detecting the current in one of the windings and means for controlling the torque of the motor in response to a difference between the detected current and the reference current.

**47**. The system of claim **46** further comprising means for inhibiting the torque controlling means for a preset period of time after commutation events whereby the effect of current spikes in the windings during torque control is minimized.

**48**. The system of claim **46** further comprising a digital-to-analog converter for generating the reference current from a digital representation of a desired maximum current magnitude.

**49**. The system of claim **46** wherein said means for detecting the current in one of the windings further includes means for detecting an overcurrent condition and means for detecting an undervoltage condition and wherein the system further comprises means for disabling the power switching means in the event of an overcurrent or an undervoltage condition.

**50**. The system of claim **30** wherein said ASIC includes means for monitoring speed of the rotating assembly for detecting stalling of the motor and means for disabling the power switching means in the event of a stall.

51. The system of claim 30 wherein said ASIC includes means for resetting said microprocessor when an undervoltage condition occurs for a predetermined interval of time and for resetting when a data signal from said microprocessor is absent for another predetermined interval of time.

52. The system of claim 30 further comprising means for disabling the power switching means when an overcurrent condition occurs.

53. The system of claim 52 wherein the disabling means comprises an overcurrent detecting circuits.

54. The system of claim 30 wherein said ASIC includes means for providing signals for driving the power switching means.

55. A system for driving a component in response to a system control signal, said system comprising:

a motor having a stationary assembly and a rotatable assembly in magnetic coupling relation to the stationary assembly, said rotatable assembly in driving relation to the component, said motor driving the component in response to a control signal;

a programmable memory for storing calibrating parameters representative of operation of said motor driving a predetermined load;

means for receiving a parameter select signal for selecting at least one calibrating parameter stored in the memory;

means, responsive to the selected calibrating parameter and to the system control signal, for generating control signals to control motor speed or torque as a function of the selected calibration parameter and the system control signal.

56. The system of claim 55 wherein the calibrating parameters represent operation of the motor driving no load.

57. The system of claim 55 wherein the calibrating parameters include a current offset and a multiplier.

58. A method for operating a system for driving a component of a heating ventilating, and/or air conditioning (HVAC) system in response to a system control signal provided by a central means, said system including a motor having a stationary assembly and a rotatable assembly in magnetic coupling relation to the stationary assembly, said rotatable assembly in driving relation to the component, said motor driving the component in response to a motor control signal; said method comprising the steps of:

storing in a programmable memory parameters representative of the system;

receiving a parameter select signal;

selecting at least one of the parameters stored in the memory in response to the parameter select signal; and

generating control signals to control motor speed or torque as a function of the selected parameter and the system control signal.

59. A method of operating a system for driving a component in response to a system control signal, said system having a motor having a stationary assembly and a rotatable assembly in magnetic coupling relation to the stationary assembly, said rotatable assembly in driving relation to the component, said motor driving the component in response to a control signal; said system comprising:

storing in a programmable memory calibrating parameters representative of operation of said motor driving a predetermined load;

receiving a parameter select signal;

selecting at least one of the parameters stored in the memory in response to the parameter select signal; and

generating control signals to control motor speed or torque as a function of the selected calibrating parameter and the system control signal.

60. A system for heating and/or cooling air comprising:

means for generating a temperature signal representative of the temperature of the air;

means for modifying the air temperature;

a motor having a stationary assembly and a rotatable assembly in magnetic coupling relation to the stationary assembly, said rotatable assembly in driving relation to the component, said motor driving the component in response to a motor control signal;

a programmable memory for storing parameters representative of the system;

means for receiving a parameter select signal for selecting at least one of the parameters stored in the memory:

means, including a microprocessor responsive to the selected parameter and to the temperature signal, for generating control signals to control motor speed or torque as a function of the selected parameter and the temperature signal; and

an instruction memory for storing instructions controlling the operation of the microprocessor.

61. A method for calibrating a system for driving a component in response to a system control signal, said system comprising:

a motor having a stationary assembly and a rotatable assembly in magnetic coupling relation to the stationary assembly, said rotatable assembly in driving relation to the component, said motor driving the component in response to a control signal;

a memory for storing parameters;

means for receiving a parameter select signal for selecting at least one of the parameters stored in the memory:

means, responsive to the stored parameters and to the system control signal, for generating control signals to control motor speed or torque; said method comprising the steps of:

operating the motor with a predetermined load;

measuring parameters of the motor during operation;

storing in the memory calibration parameters corresponding to the measured parameters; and

controlling motor speed or torque as a function of the calibration parameters and the system control signal.

62. A method for operating an electronically commutated motor interconnected with a control having a memory for storing operating characteristics and having means, responsive to the memory and a system control signal, for controlling motor speed or torque; said method comprising the steps of:

operating the motor and control with a predetermined load;

measuring operating characteristics of the motor and control during operation;

storing in the memory parameters representative of the load and information corresponding to the operating characteristics;

receiving a parameter select signal;

selecting at least one of the parameters stored in the memory in response to the parameter select signal;

receiving the system control signal; and

controlling motor speed or torque as a function of the stored information corresponding to the operating characteristics, the system control signal and the selected parameter.

63. A method of interrelationally calibrating a control having a programmable memory and an electronically controlled motor comprising the steps of:

interconnecting the control and the motor;

operating the interconnected control and motor under predetermined conditions;

storing in the memory parameters representative of the predetermined conditions;

receiving parameter select signal;

selecting at least one of the parameters stored in the memory in response to the parameter select signal;

sensing calibration information during said operating step; and

storing in the memory operating characteristics corresponding to the sensed calibration information obtained during the sensing step and corresponding to the selected parameter so that the control circuit and its manufactured variations will be calibrated to the motor and its manufactured variations whereby the sensed calibration information is used in conjunction with subsequent operation of the control and the motor minimizing variations in control and motor characteristics caused by manufacturing.

**64**. The system of claim **1** wherein the central means comprises a thermostat for providing a temperature signal representative of the temperature of the air.

**65**. The system of claim **1** wherein the central means comprises a humidistat for providing a humidity signal representative of the humidity of the air.

**66**. The system of claim **46** further comprising means for starting the motor from a standstill, the motor starting means comprising:

means for sequentially commutating the windings in a selected direction of rotation wherein the reference current linearly increases from a minimum value to a maximum value, the minimum and maximum values and the duration of the linear increase being a predetermined function of the inertia of the load and the acceleration required for smoothly starting the motor from standstill.

**67**. The system of claim **60** wherein said means for generating a temperature signal includes a thermostat.

**68**. A system for driving a component in response to a system control signal, said system comprising:

a motor having a stationary assembly and a rotatable assembly in magnetic coupling relation to the stationary assembly, said rotatable assembly in driving relation to the component, said motor driving the component in response to a control signal;

a programmable memory for storing parameters defining direction of rotation fur operating said motor;

means for receiving a parameter select signal for selecting at least one parameter stored in the memory; and

means, including a microprocessor responsive to the direction parameter and to the system control signal, for generating control signals to control motor speed or torque as a function of the direction parameter and the system control signal.

**69**. A system for driving a component in response to a system control signal, said system comprising:

a motor having a stationary assembly and a rotatable assembly in magnetic coupling relation to the stationary assembly, said rotatable assembly in driving relation to the component, said motor driving the component in response to a control signal;

a programmable memory for storing parameters defining turn-on and turn-off time delays for operating said motor; and

means for receiving a parameter select signal for selecting at least one parameter stored in the memory; and

means, including a microprocessor responsive to the selected time delay parameter and to the system control signal, for generating control signals to control motor speed or torque as a function of the selected time delay parameter and the system control signal.

**70**. A system for driving a component in response to a system control signal, said system comprising:

a motor having a stationary assembly and a rotatable assembly in magnetic coupling relation to the stationary assembly, said rotatable assembly in driving relation to the component, said motor driving the component in response to a control signal;

means for defining a reference current;

a programmable memory for storing parameters defining a rate of linear increase of the reference current for operating said motor;

means for receiving a parameter select signal for selecting at least one parameter stored in the memory; and

means, including a microprocessor responsive to the selected rate of linear increase parameter and to the system control signal, for generating control signals to control motor speed or torque for starting said motor from standstill as a function of the selected rate of linear increase parameter and the system control signal.

**71**. A system for heating and/or cooling air comprising:

means for generating a humidity signal representative of the humidity of the air;

means for modifying the air humidity;

a motor having a stationary assembly and a rotatable assembly in magnetic coupling relation to the stationary assembly, said rotatable assembly in driving relation to the component, said motor driving the component in response to a motor control signal;

a programmable memory for storing parameters representative of the system;

means for receiving a parameter select signal for selecting at least one parameter stored in the memory;

means, including a microprocessor responsive to the selected parameter and to the humidity signal, for generating control signals to control motor speed or torque as a function of the selected parameter and the humidity signal; and

an instruction memory for storing instructions controlling the operation of the microprocessor.

**72**. The system of claim **71** wherein said means for generating a humidity signal includes a humidistat.

**73**. A system for driving a component of a heating ventilating, and/or air conditioning (HVAC) system in response to a system control signal provided by a central means, said system comprising:

a motor having a stationary assembly including windings and having a rotatable assembly in magnetic coupling relation to the stationary assembly, said rotatable assembly in driving relation to the component, said motor driving the component in response to a control signal; and

means for starting said motor from a standstill, the motor starting means comprising:

means for sequentially commutating the windings in a selected direction of rotation; and

means for defining a reference current;

means for detecting the current in one of the windings; and

means for controlling the torque of the motor in response to a difference between the detected current and the reference current, said means for controlling linearly increasing the reference current from a minimum value to a maximum value, the minimum and maximum values and the duration of the linear increase being a predetermined function of the inertia of the load and the acceleration required for starting the motor from standstill.

**74**. A system for driving a component of a heating ventilating, and/or air conditioning (HVAC) system in response to a system control signal provided by a central means, said system comprising:

a motor having a stationary assembly and a rotatable assembly in magnetic coupling relation to the stationary assembly, said rotatable assembly in driving relation to the component, said motor driving the component in response to a control signal;

a programmable memory for storing calibrating parameters corresponding to the HVAC system and representative of operation of said motor driving a predetermined load;

means for receiving a parameter select signal for selecting at least one calibrating parameter stored in the memory;

means, including a microprocessor responsive to the selected calibrating parameter and to the system control signal, for generating control signals to control motor speed or torque as a function of the selected calibrating parameter and the system control signal such that the HVAC system delivers a substantially constant air flow.

* * * * *