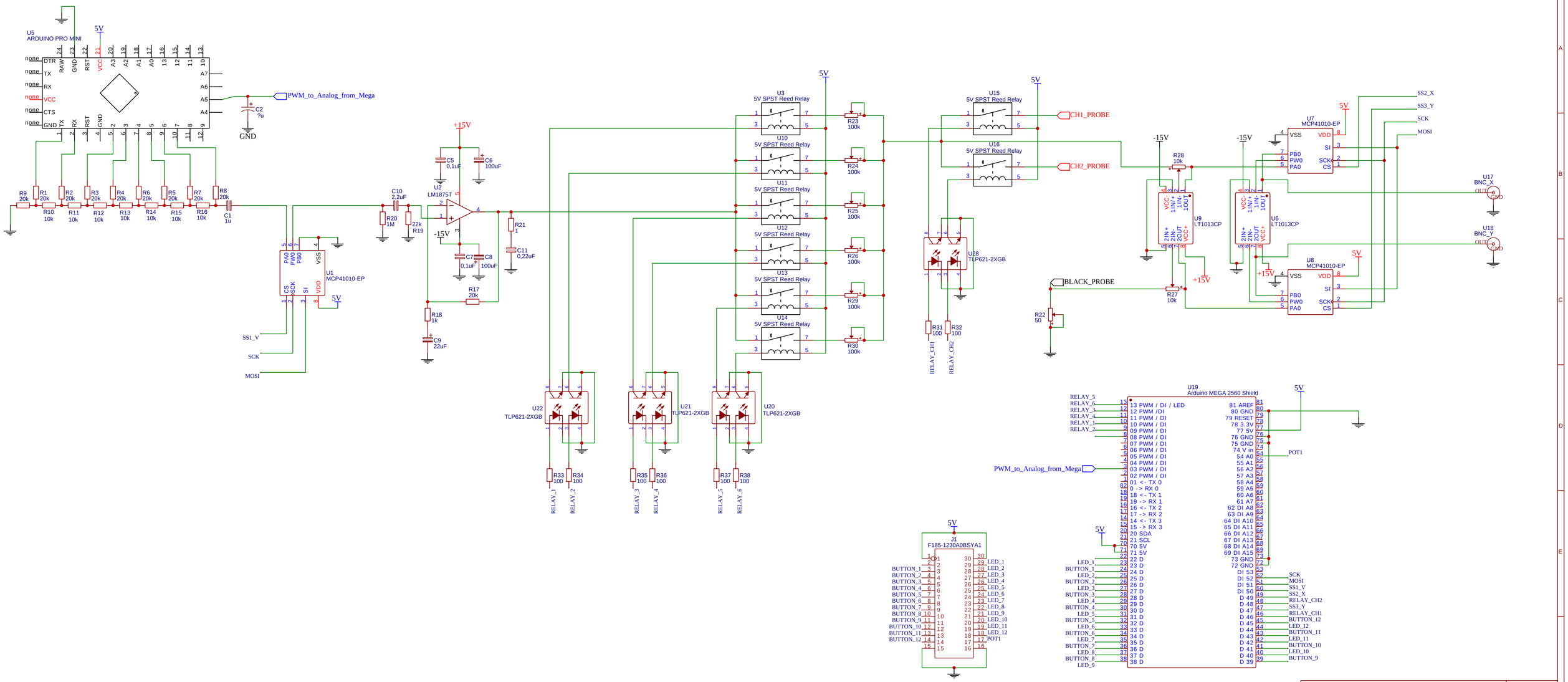
U5
ARDUINO PRO MINI
PWM_to_Analog_from_Mega
GND
U1
MCP41010-EP
U2
LM1875T
U3
5V SPST Reed Relay
U10
U11
U12
U13
U14
U15
U16
U20
TLP621-2XGB
U21
U22
U29
CH1_PROBE
CH2_PROBE
BLACK_PROBE
U7
MCP41010-EP
U8
U9
LT1013CP
U6
U17
BNC_X
U18
BNC_Y
U19
Arduino MEGA 2560 Shield
J1
F185-1230A0BSYA1
SS1_V
SCK
MOSI
SS2_X
SS3_Y
POT1
RELAY_CH1
RELAY_CH2
TITLE:
Tracer_V3
REV: 1.0
Date: 2017-02-18
Sheet: 1/1
EasyEDA V4.1.3
Drawn By: t.mate1129