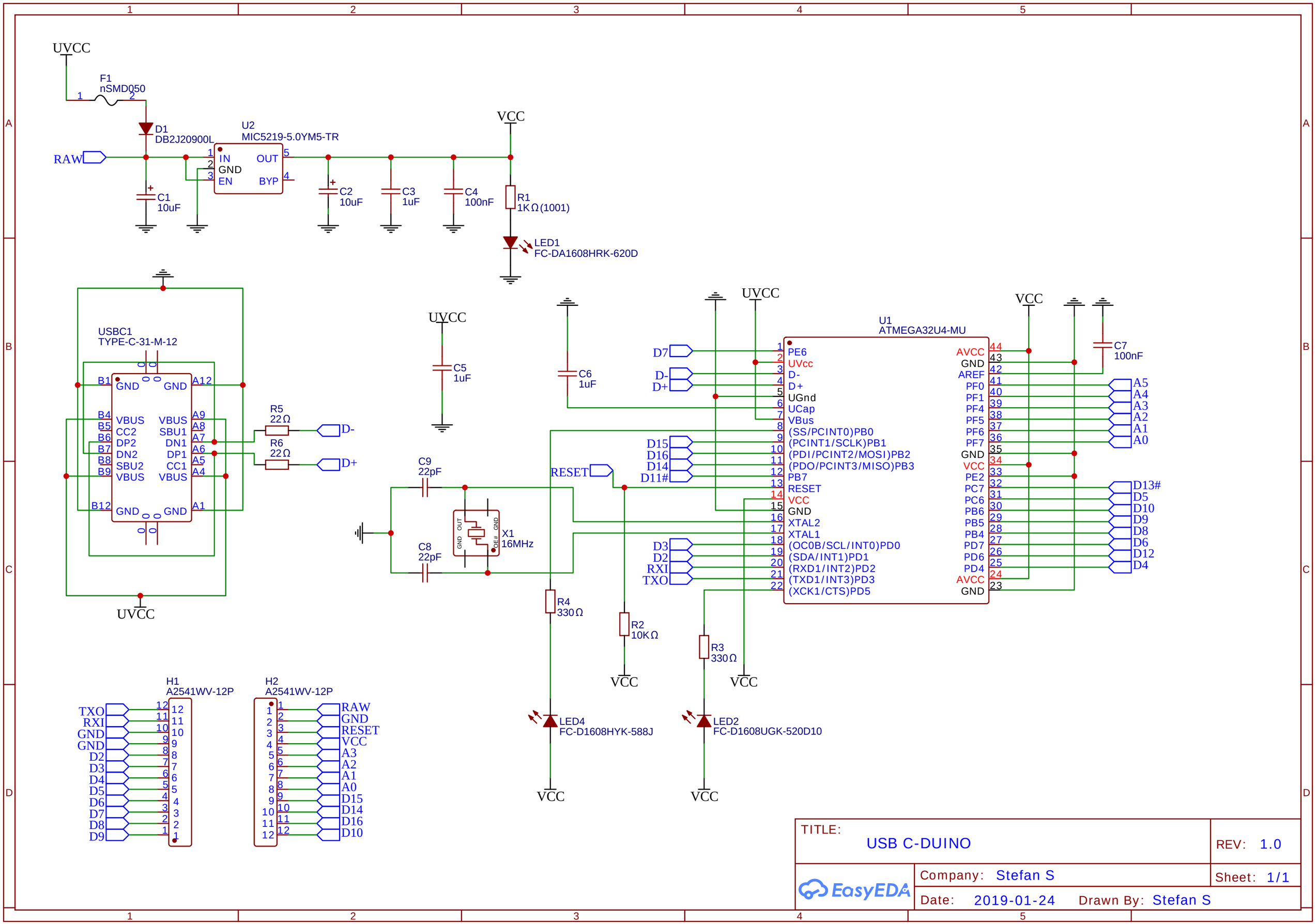
UVCC
F1
nSMD050
D1
DB2J20900L
RAW
U2
MIC5219-5.0YM5-TR
IN
GND
EN
OUT
BYP
C1
10uF
C2
10uF
C3
1uF
C4
100nF
VCC
R1
1KΩ(1001)
LED1
FC-DA1608HRK-620D
USBC1
TYPE-C-31-M-12
GND
VBUS
CC2
DP2
DN2
SBU2
SBU1
DN1
DP1
CC1
R5
22Ω
R6
22Ω
D-
D+
C5
1uF
C6
1uF
C9
22pF
C8
22pF
X1
16MHz
RESET
U1
ATMEGA32U4-MU
PE6
UVcc
D-
D+
UGnd
UCap
VBus
(SS/PCINT0)PB0
(PCINT1/SCLK)PB1
(PDI/PCINT2/MOSI)PB2
(PDO/PCINT3/MISO)PB3
PB7
RESET
VCC
GND
XTAL2
XTAL1
(OC0B/SCL/INT0)PD0
(SDA/INT1)PD1
(RXD1/INT2)PD2
(TXD1/INT3)PD3
(XCK1/CTS)PD5
AVCC
AREF
PF0
PF1
PF4
PF5
PF6
PF7
PE2
PC7
PC6
PB6
PB5
PB4
PD7
PD6
PD4
C7
100nF
A5
A4
A3
A2
A1
A0
D13#
D5
D10
D9
D8
D6
D12
D4
D7
D15
D16
D14
D11#
D3
D2
RXI
TXO
R4
330Ω
R2
10KΩ
R3
330Ω
LED4
FC-D1608HYK-588J
LED2
FC-D1608UGK-520D10
H1
A2541WV-12P
H2
A2541WV-12P
RAW
GND
RESET
VCC
A3
A2
A1
A0
D15
D14
D16
D10
TITLE:
USB C-DUINO
REV: 1.0
Company: Stefan S
Sheet: 1/1
Date: 2019-01-24
Drawn By: Stefan S
EasyEDA