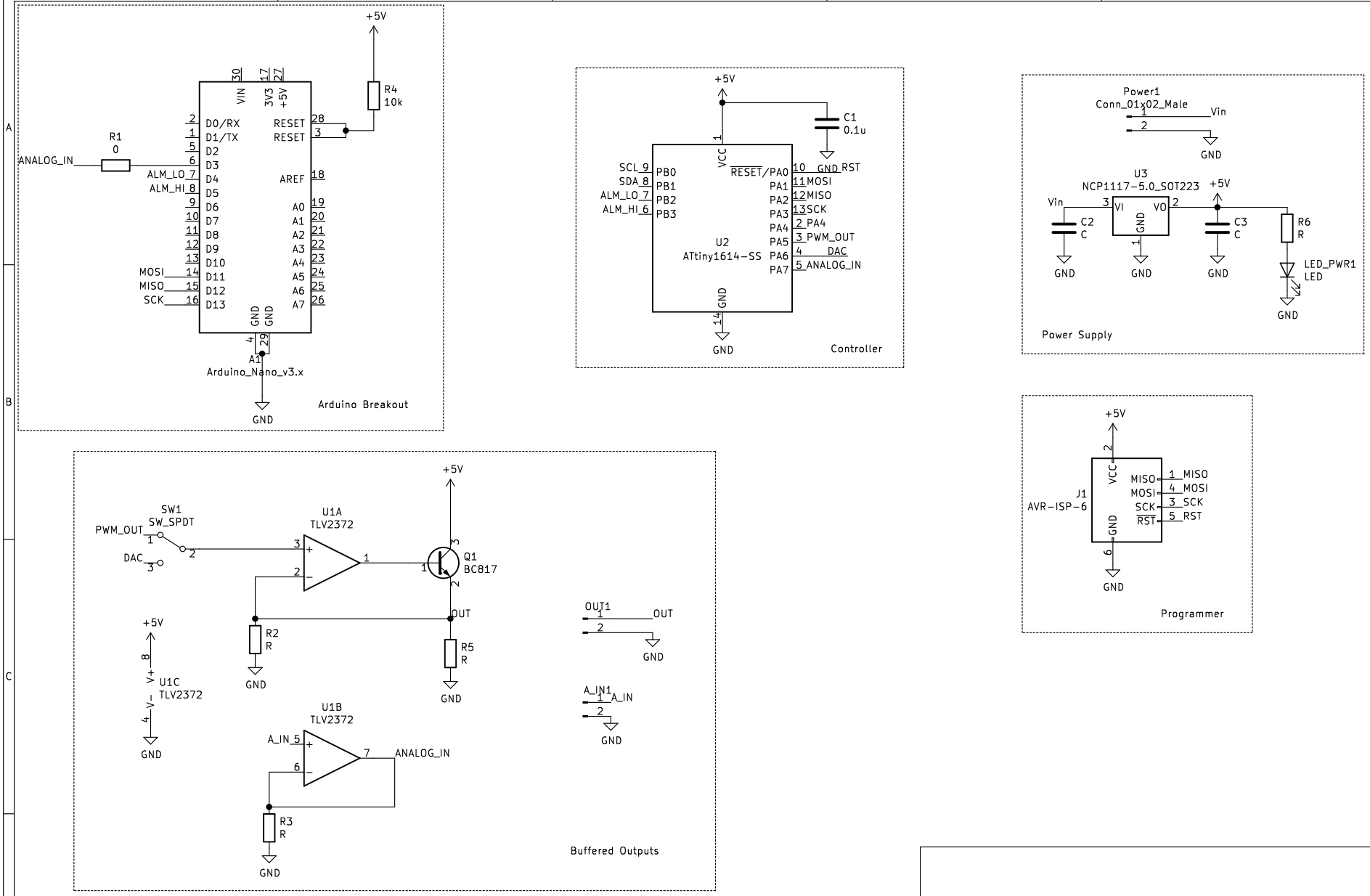

Z. Strohm

Sheet: /

File: uPID.sch

Title: µPID

Size: A4	Date: 2019-10-16	**Rev: 0.2**
KiCad E.D.A. kicad (5.1.0)-1		Id: 1/1