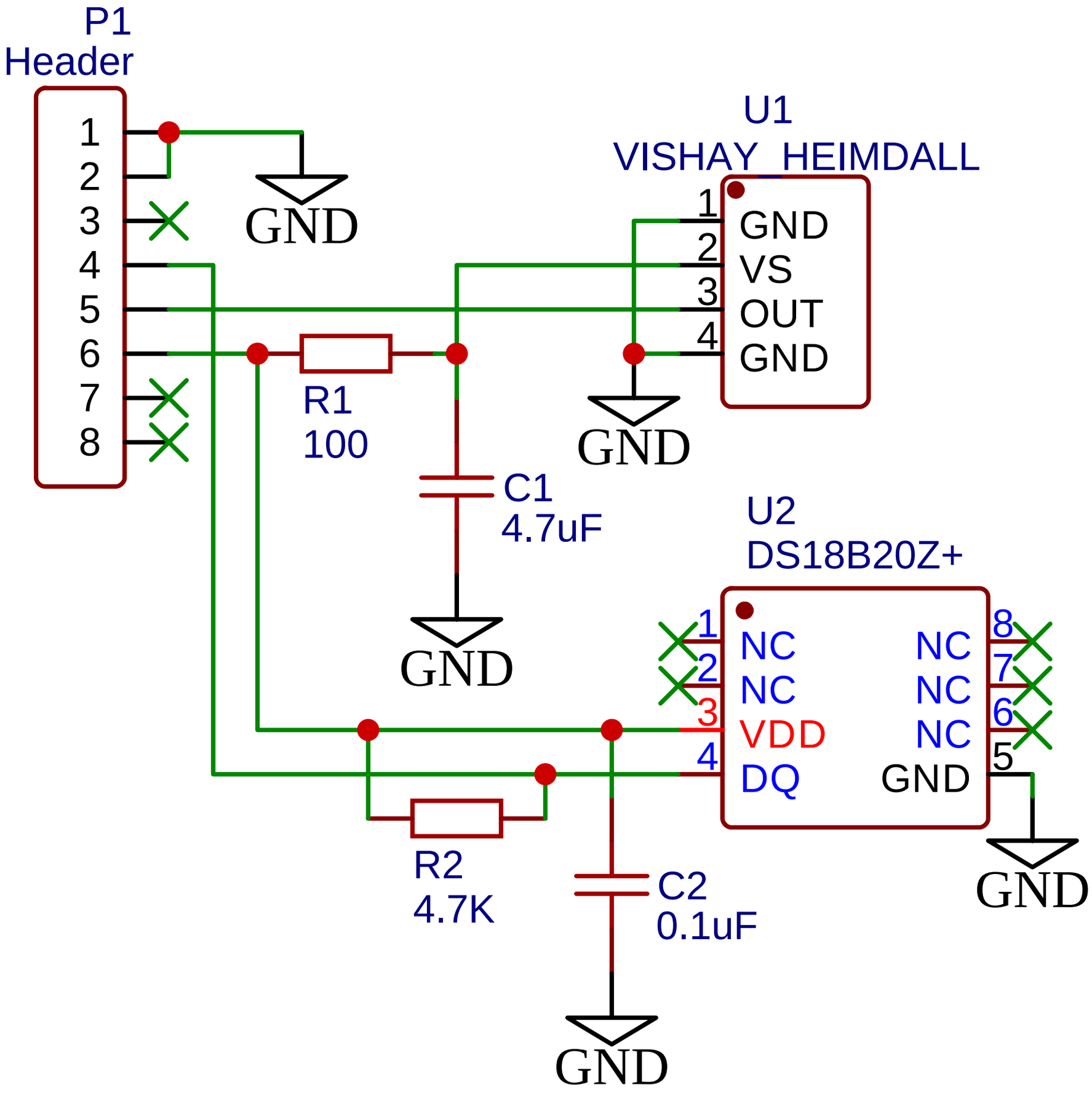
P1
Header
1
2
3
4
5
6
7
8
GND
U1
VISHAY_HEIMDALL
1
2
3
4
GND
VS
OUT
GND
GND
R1
100
C1
4.7uF
GND
U2
DS18B20Z+
1
2
3
4
NC
NC
VDD
DQ
NC
NC
NC
GND
8
7
6
5
GND
R2
4.7K
C2
0.1uF
GND