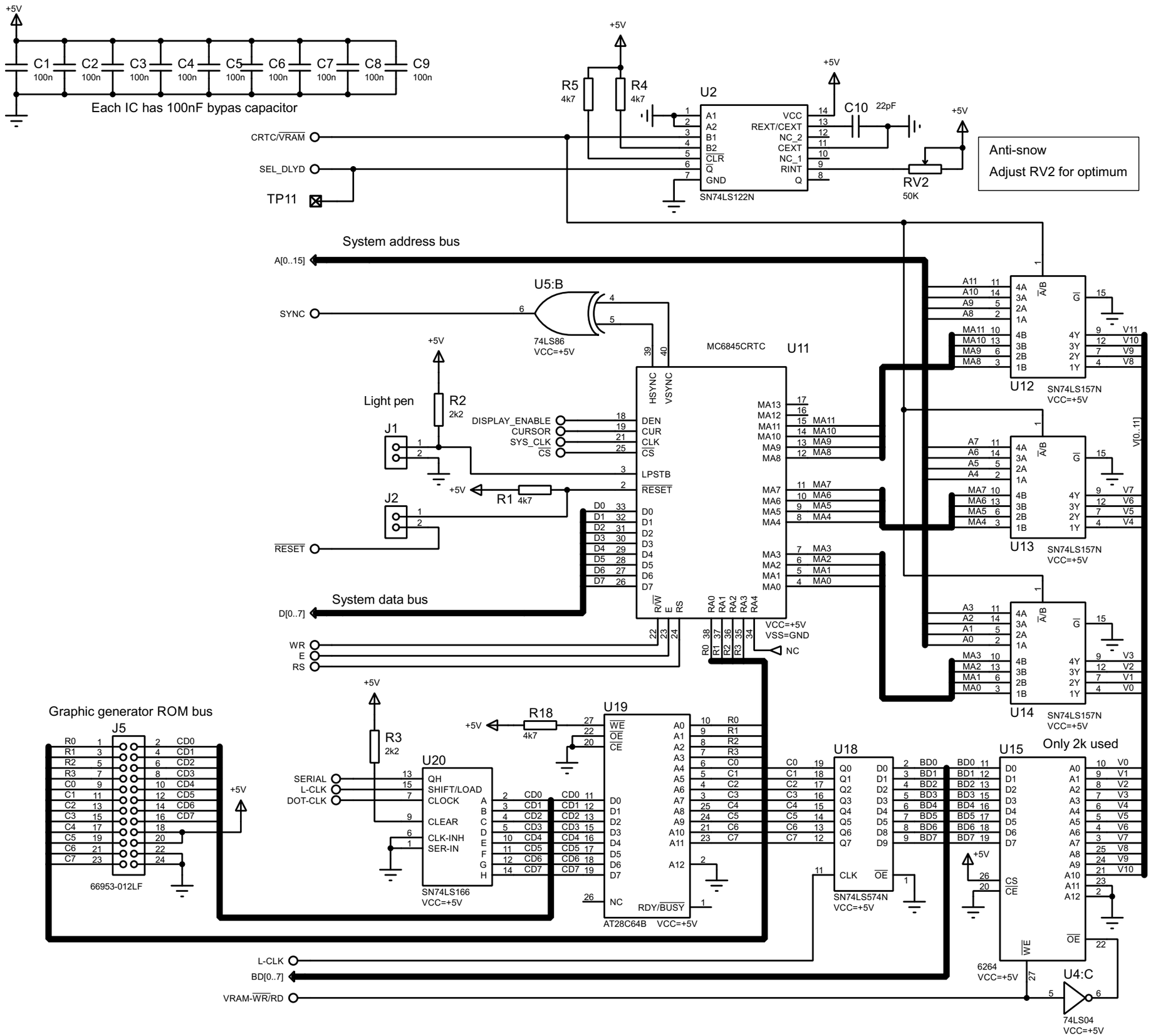

Interak

Composite Video Display

AP-VDU80-3

Page 1

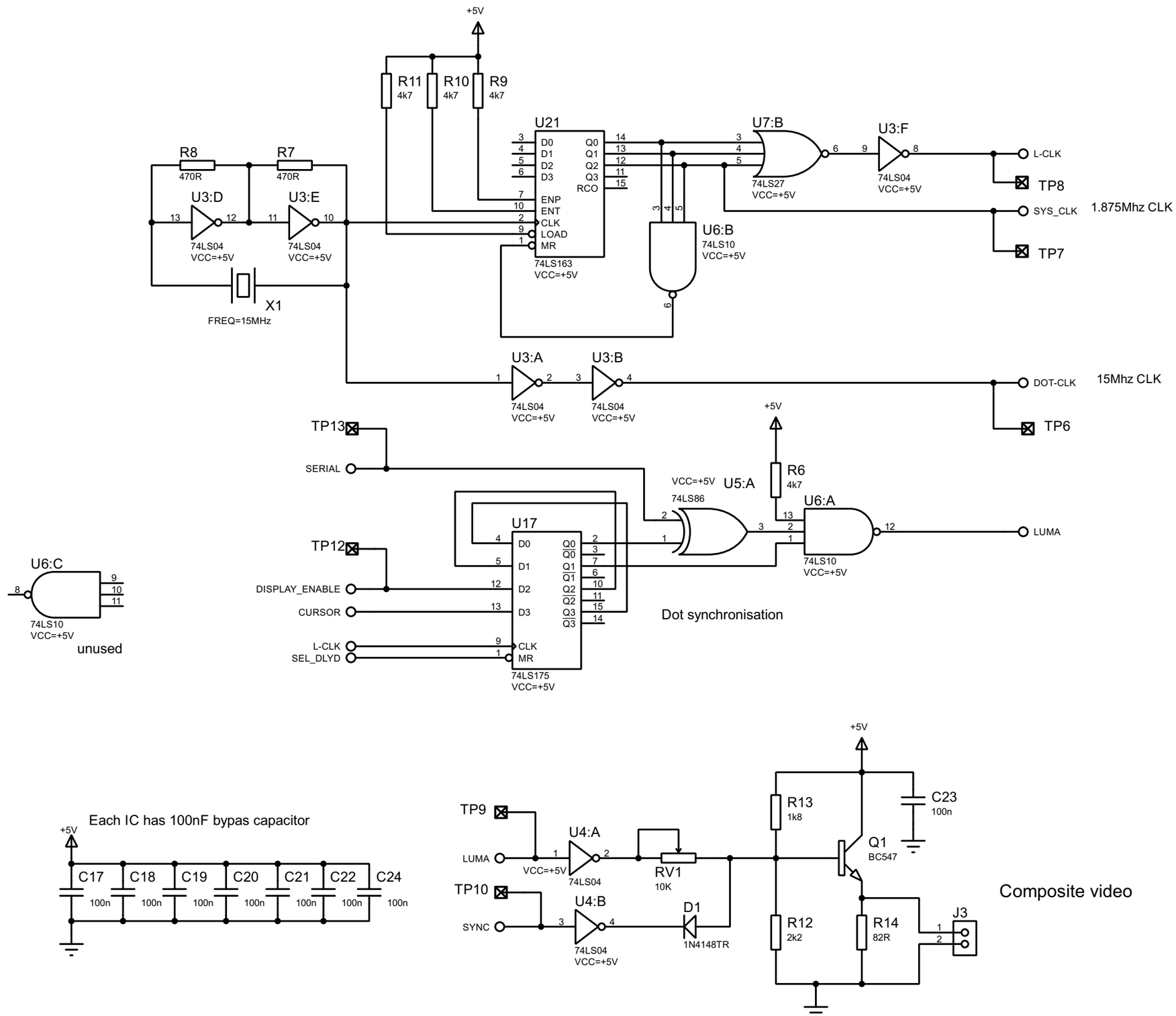

Interak

Composite Video Display

AP-VDU80-3

Page 2

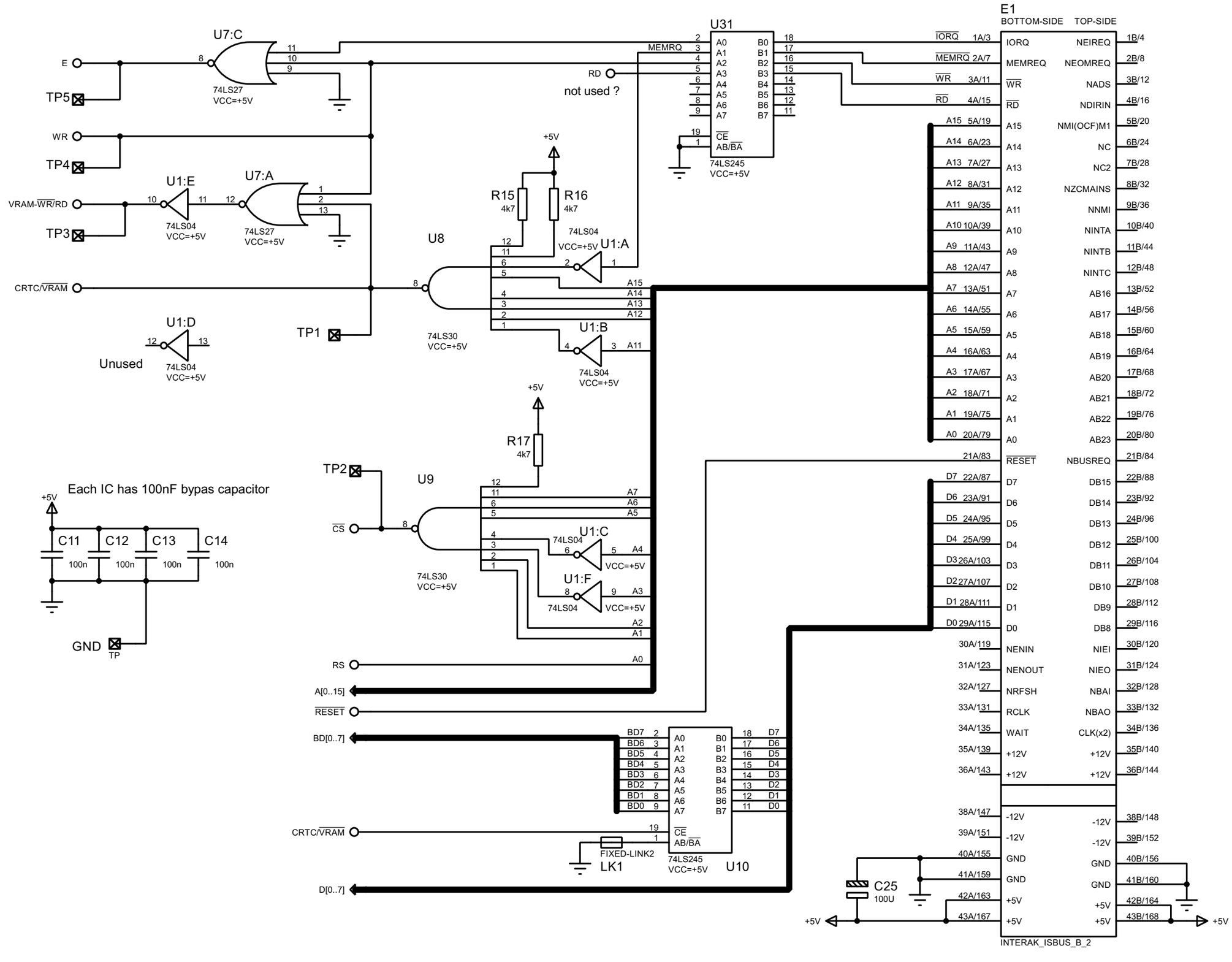

Interak

Composite Video Display

AP-VDU80-3

Page 3