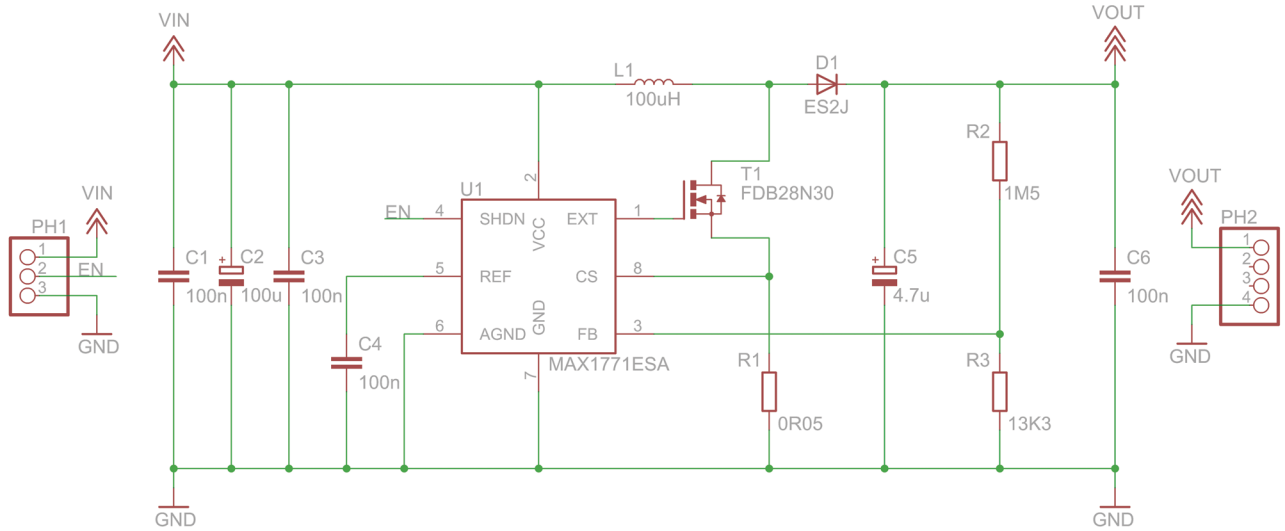

CAUTION!	NIXIE MODULE
HIGH VOLTAGE 170V	POWER SUPPLY
WWW.NIXIETESTER.COM	Design: Marcin Saj
Date: 25 March 2019	Sheet: 1/1 v1