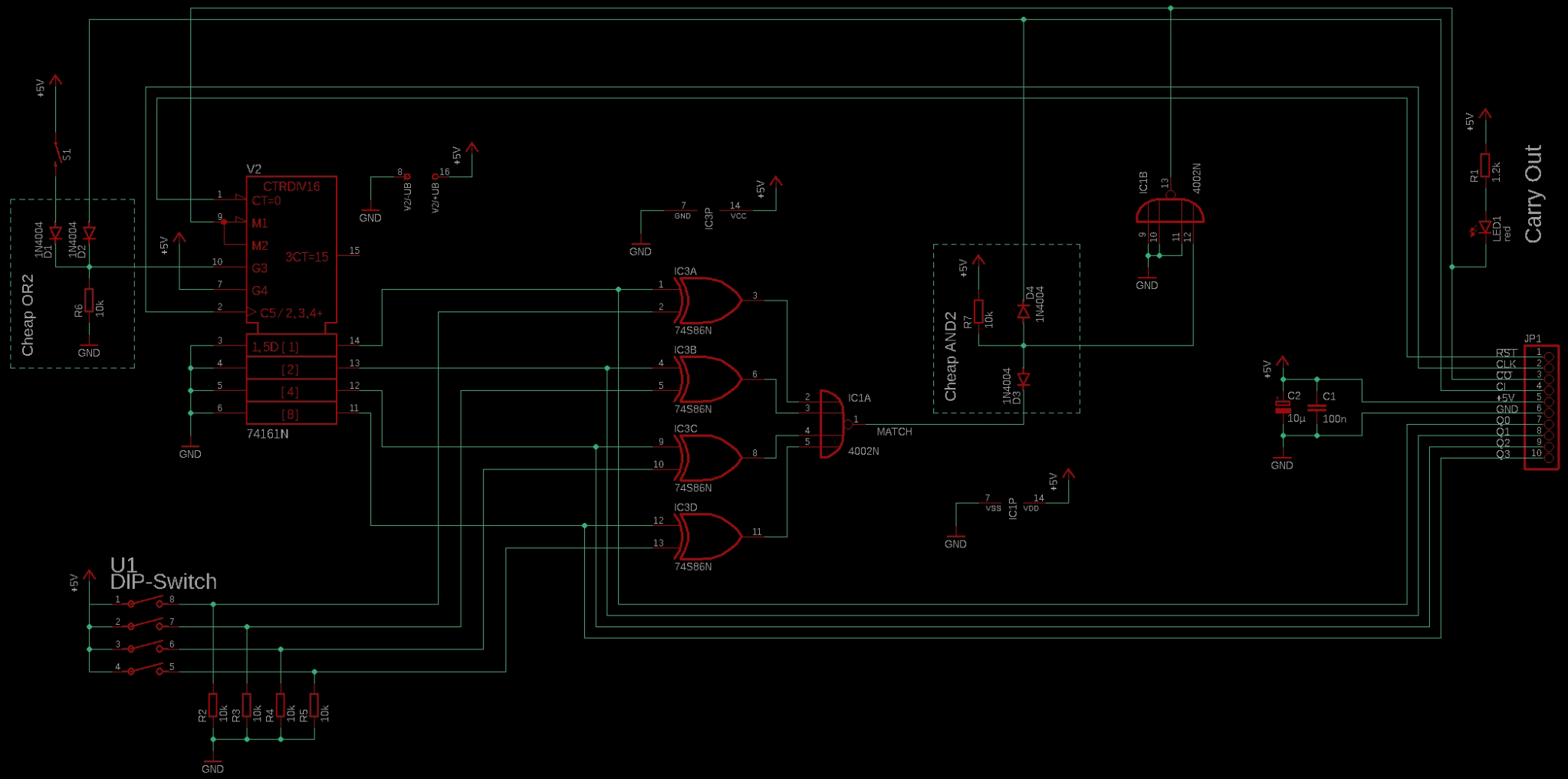

74xx Discrete Clock
by Stephan Nolting

counter_module
18.05.2020 20:07
Sheet: 1/1