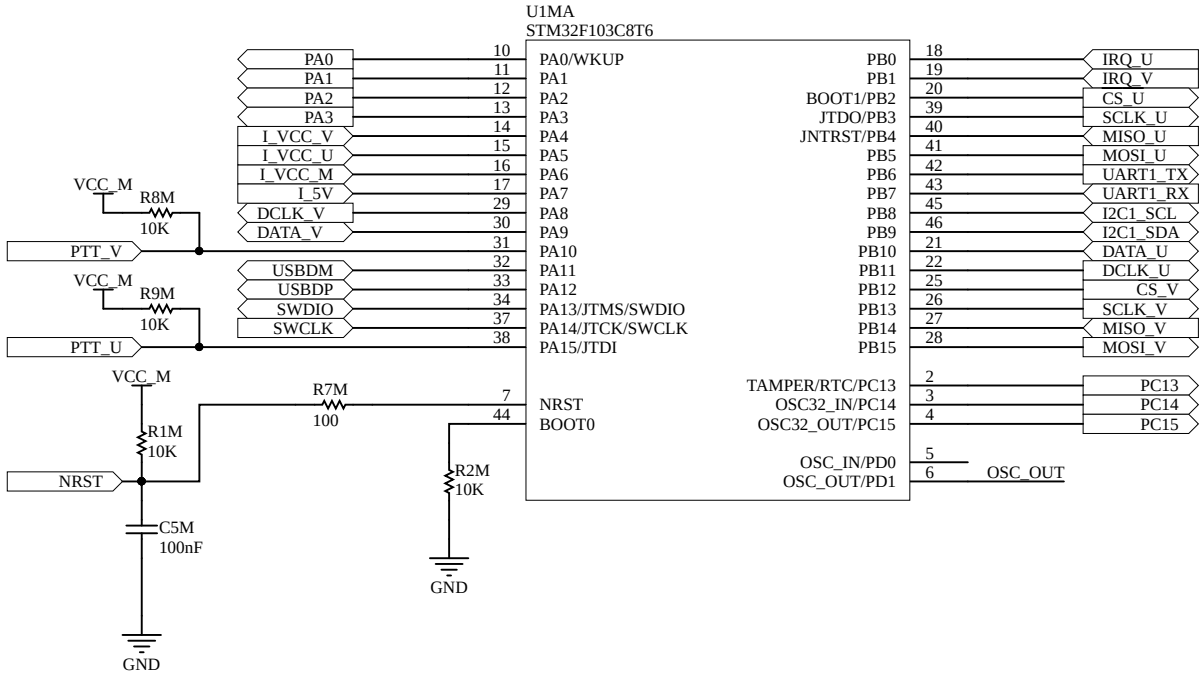

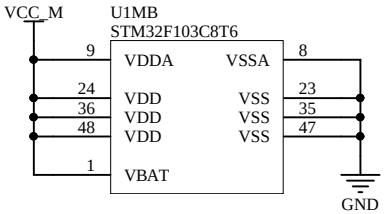

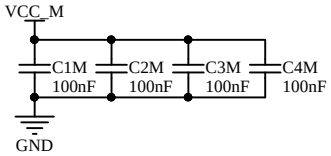

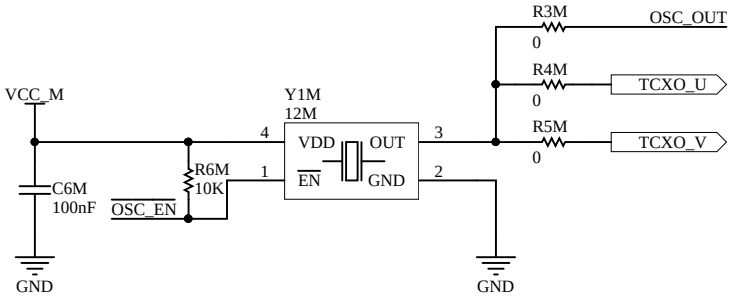

Title ***VUHF Radio***		
Size: A4	Number:*	Revision:V2
Date: 27/02/2020	Time: 16:57:11	Sheet 1 of 5

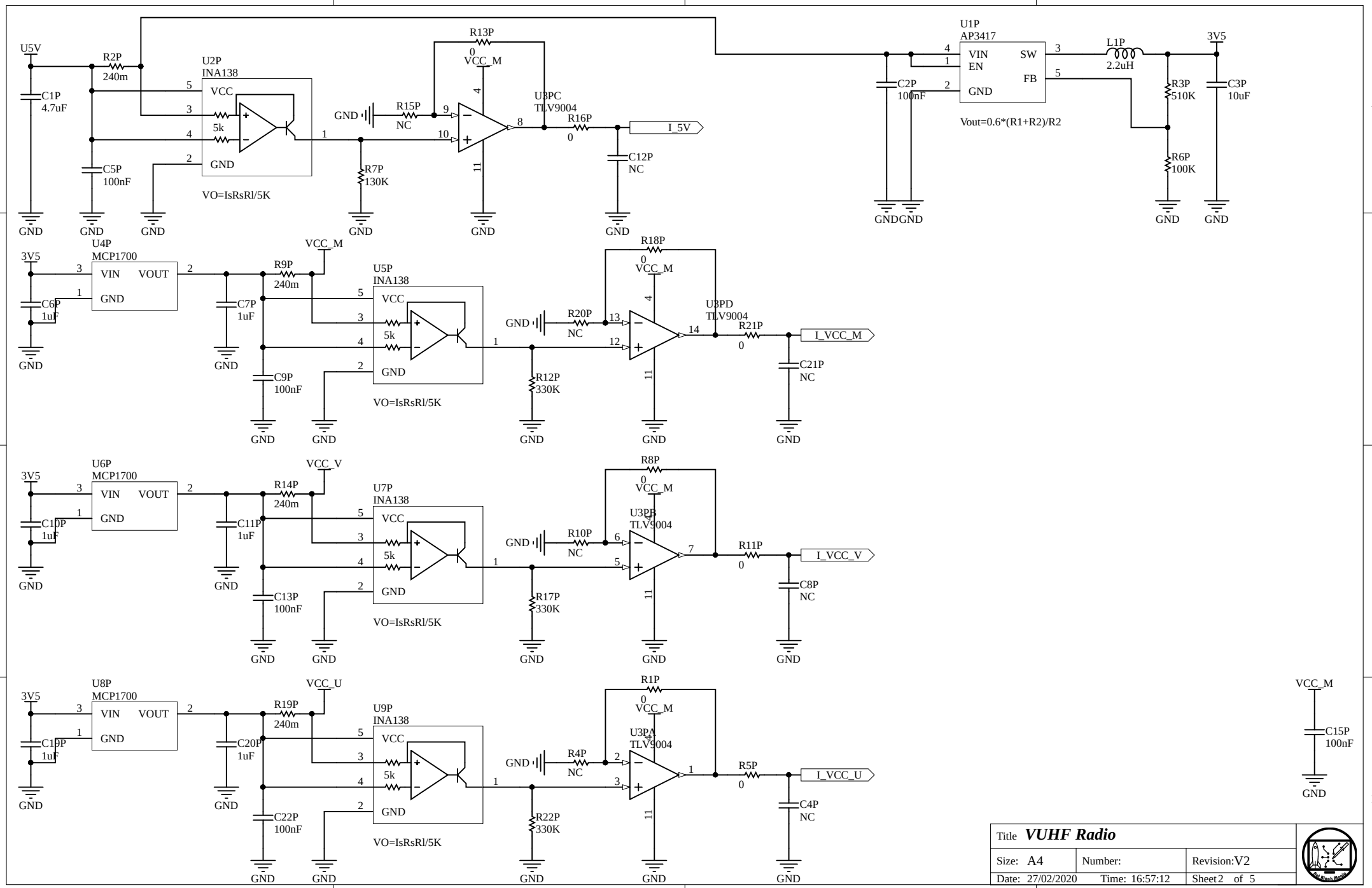
U5V
C1P
4.7uF
R2P
240m
U2P
INA138
VCC
5k
GND
C5P
100nF
VO=IsRsRl/5K
R13P
0
VCC_M
GND
R15P
NC
R7P
130K
U3PC
TLV9004
R16P
0
I_5V
C12P
NC
U1P
AP3417
VIN
EN
GND
SW
FB
C2P
100nF
Vout=0.6*(R1+R2)/R2
L1P
2.2uH
3V5
R3P
510K
R6P
100K
C3P
10uF
U4P
MCP1700
VIN
VOUT
GND
C6P
1uF
C7P
1uF
R9P
240m
U5P
INA138
C9P
100nF
R18P
R20P
NC
R12P
330K
U3PD
TLV9004
R21P
I_VCC_M
C21P
NC
U6P
MCP1700
C10P
1uF
C11P
1uF
R14P
240m
VCC_V
U7P
INA138
C13P
100nF
R8P
R10P
NC
R17P
330K
U3PB
TLV9004
R11P
I_VCC_V
C8P
NC
U8P
MCP1700
C19P
1uF
C20P
1uF
R19P
240m
VCC_U
U9P
INA138
C22P
100nF
R1P
R4P
NC
R22P
330K
U3PA
TLV9004
R5P
I_VCC_U
C4P
NC
C15P
100nF
Title VUHF Radio
Size: A4
Number:
Revision:V2
Date: 27/02/2020
Time: 16:57:12
Sheet 2 of 5

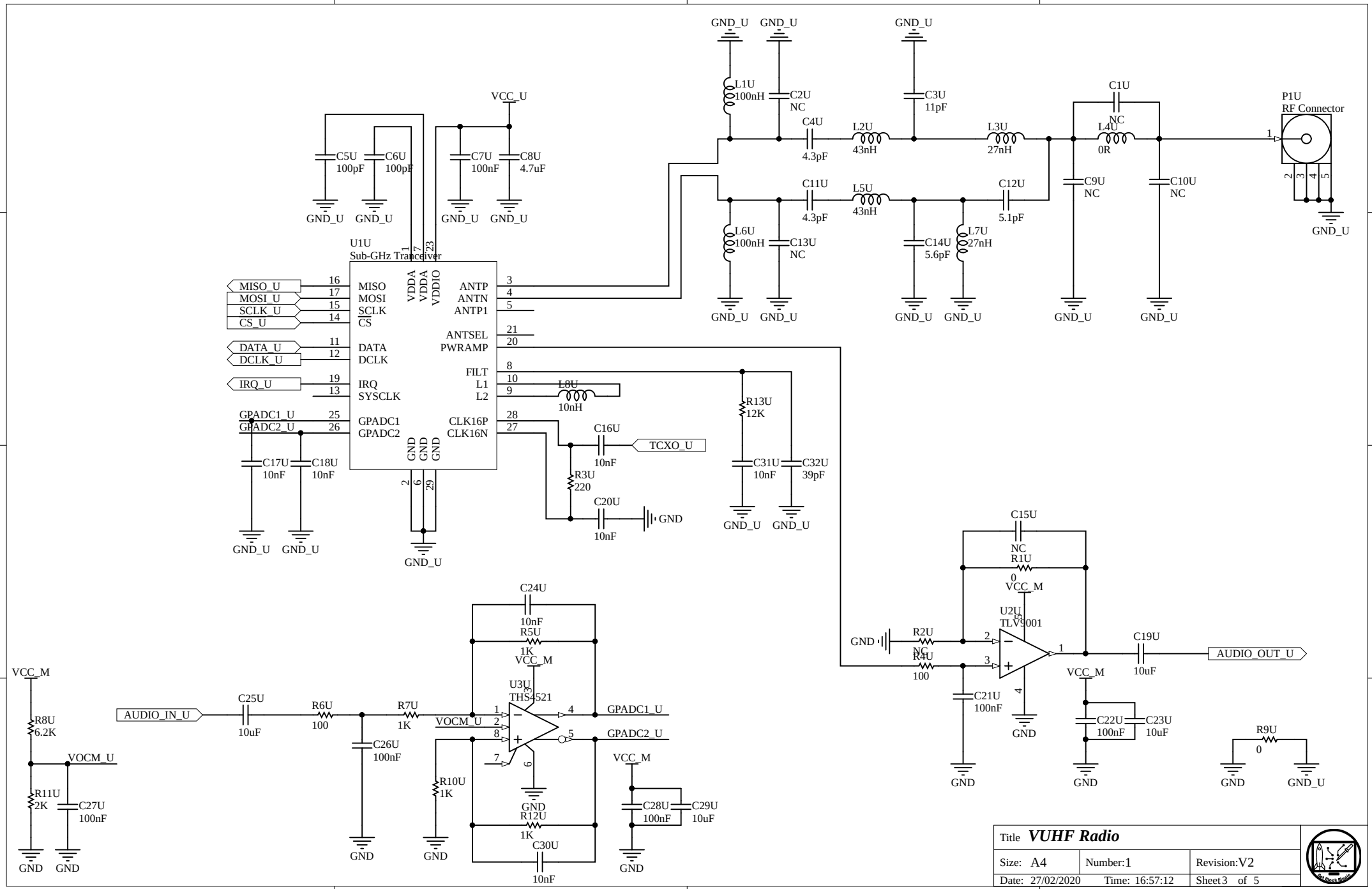
U1U
Sub-GHz Tranceiver
MISO
MOSI
SCLK
CS
DATA
DCLK
IRQ
SYSCLK
GPADC1
GPADC2
VDDA
VDDA
VDDIO
ANTP
ANTN
ANTP1
ANTSEL
PWRAMP
FILT
L1
L2
CLK16P
CLK16N
GND
GND
GND
MISO_U
MOSI_U
SCLK_U
CS_U
DATA_U
DCLK_U
IRQ_U
GPADC1_U
GPADC2_U
TCXO_U
VCC_U
GND_U
L1U 100nH
C2U NC
C3U 11pF
C4U 4.3pF
L2U 43nH
L3U 27nH
C1U NC
L4U 0R
P1U RF Connector
C5U 100pF
C6U 100pF
C7U 100nF
C8U 4.7uF
C11U 4.3pF
L5U 43nH
C12U 5.1pF
L6U 100nH
C13U NC
C14U 5.6pF
L7U 27nH
C9U NC
C10U NC
L8U 10nH
R13U 12K
C16U 10nF
R3U 220
C20U 10nF
C31U 10nF
C32U 39pF
C17U 10nF
C18U 10nF
C15U NC
R1U 0
VCC_M
U2U TLV9001
R2U NC
R4U 100
C19U 10uF
AUDIO_OUT_U
C21U 100nF
C22U 100nF
C23U 10uF
R9U 0
C24U 10nF
R5U 1K
U3U THS4521
AUDIO_IN_U
C25U 10uF
R6U 100
R7U 1K
C26U 100nF
VOCM_U
R10U 1K
R12U 1K
C30U 10nF
GPADC1_U
GPADC2_U
C28U 100nF
C29U 10uF
R8U 6.2K
R11U 2K
C27U 100nF
Title VUHF Radio
Size: A4
Number:1
Revision:V2
Date: 27/02/2020
Time: 16:57:12
Sheet 3 of 5

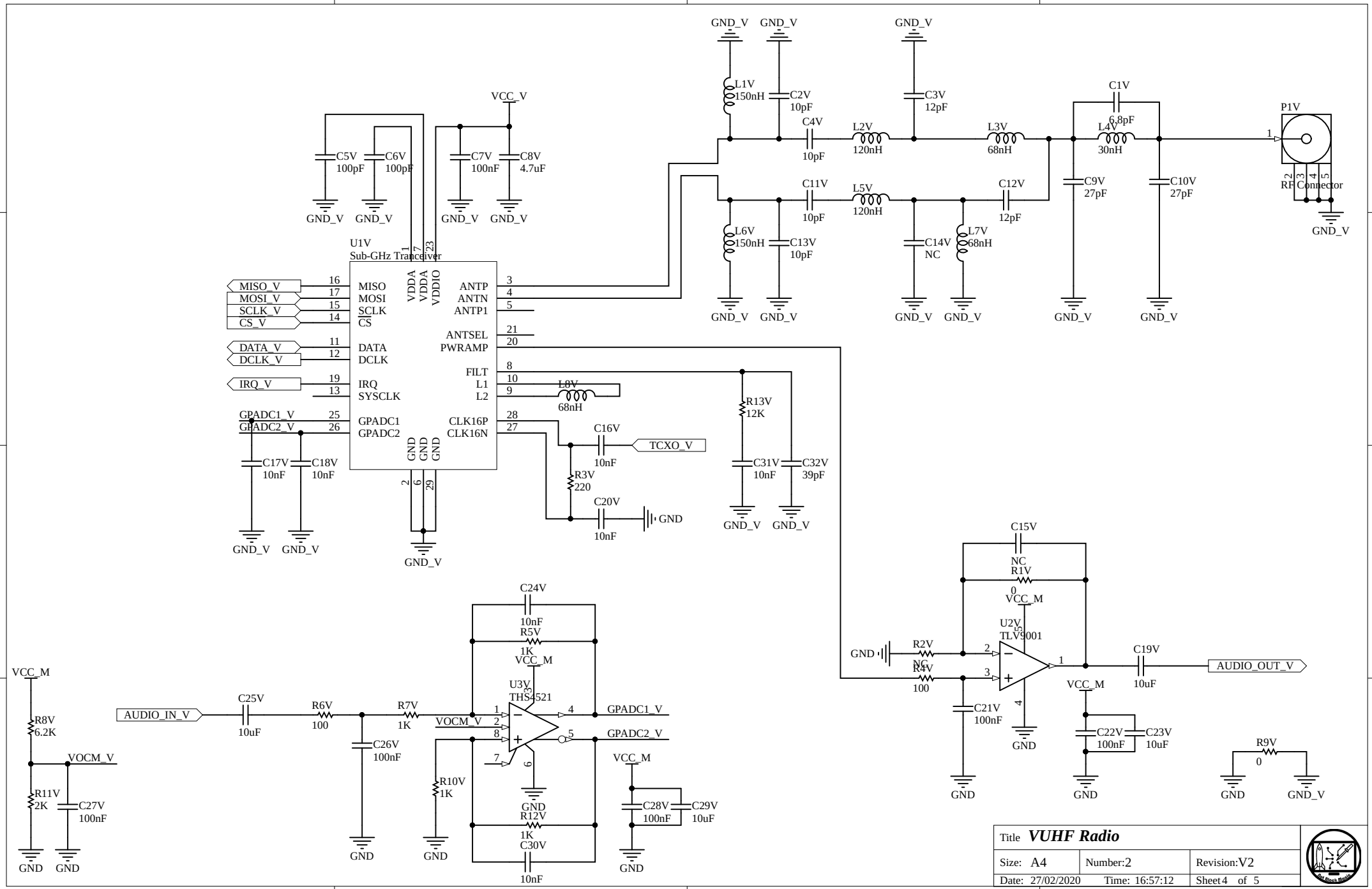

Title	***VUHF Radio***	
Size: A4	Number:2	Revision:V2
Date: 27/02/2020	Time: 16:57:12	Sheet 4 of 5

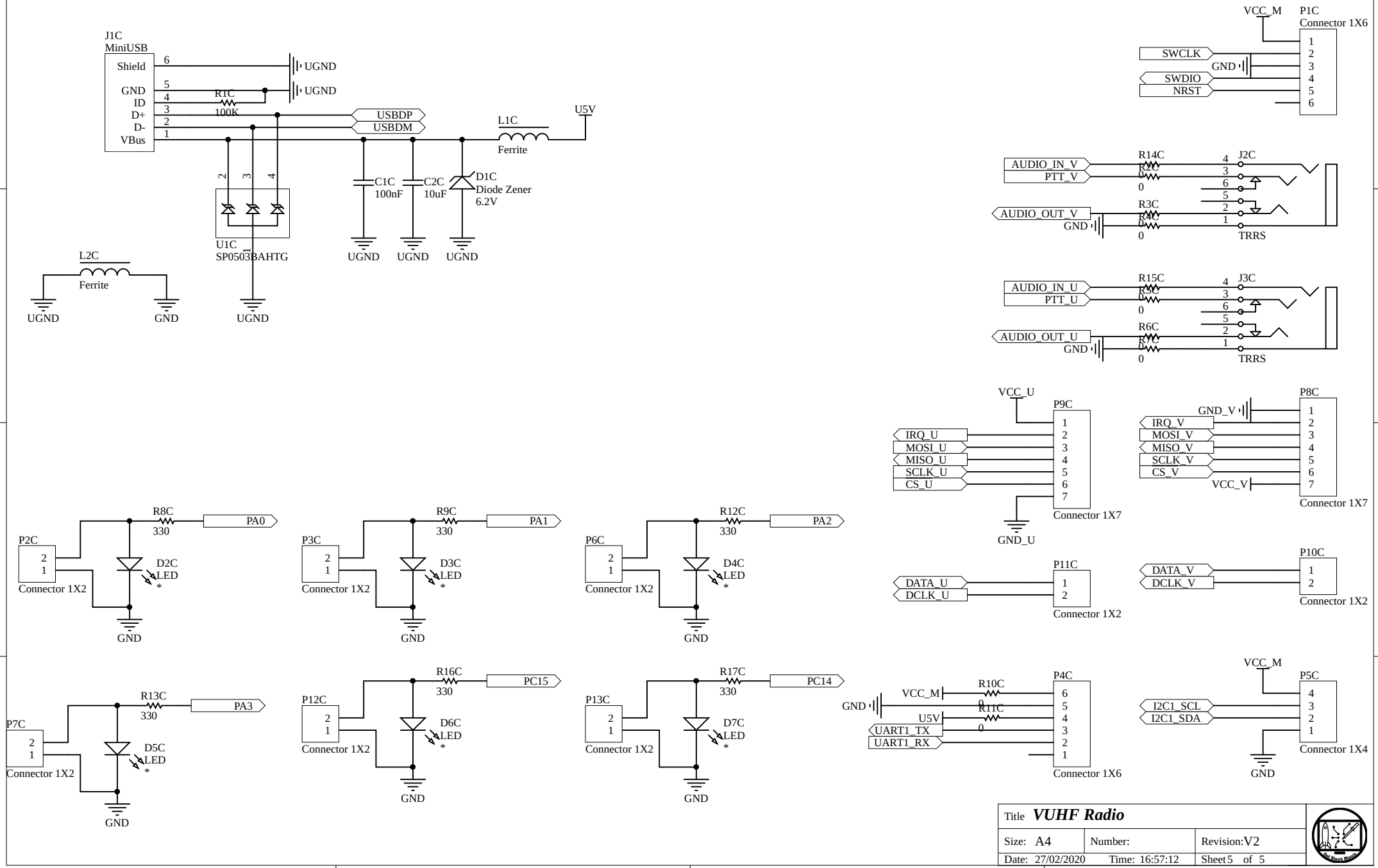
J1C
MiniUSB
Shield
GND
ID
D+
D-
VBus
R1C
100K
UGND
USBDP
USBDM
L1C
Ferrite
U5V
C1C
100nF
C2C
10uF
D1C
Diode Zener
6.2V
U1C
SP0503BAHTG
L2C
Ferrite
GND
VCC_M
P1C
Connector 1X6
SWCLK
SWDIO
NRST
AUDIO_IN_V
PTT_V
AUDIO_OUT_V
R14C
R2C
R3C
R4C
J2C
TRRS
AUDIO_IN_U
PTT_U
AUDIO_OUT_U
R15C
R5C
R6C
R7C
J3C
VCC_U
P9C
IRQ_U
MOSI_U
MISO_U
SCLK_U
CS_U
GND_U
Connector 1X7
P8C
GND_V
IRQ_V
MOSI_V
MISO_V
SCLK_V
CS_V
VCC_V
P2C
R8C
330
PA0
D2C
LED
Connector 1X2
P3C
R9C
PA1
D3C
P6C
R12C
PA2
D4C
P11C
DATA_U
DCLK_U
P10C
DATA_V
DCLK_V
P7C
R13C
PA3
D5C
P12C
R16C
PC15
D6C
P13C
R17C
PC14
D7C
P4C
R10C
R11C
VCC_M
U5V
UART1_TX
UART1_RX
Connector 1X6
P5C
I2C1_SCL
I2C1_SDA
Connector 1X4
Title VUHF Radio
Size: A4
Number:
Revision: V2
Date: 27/02/2020
Time: 16:57:12
Sheet 5 of 5