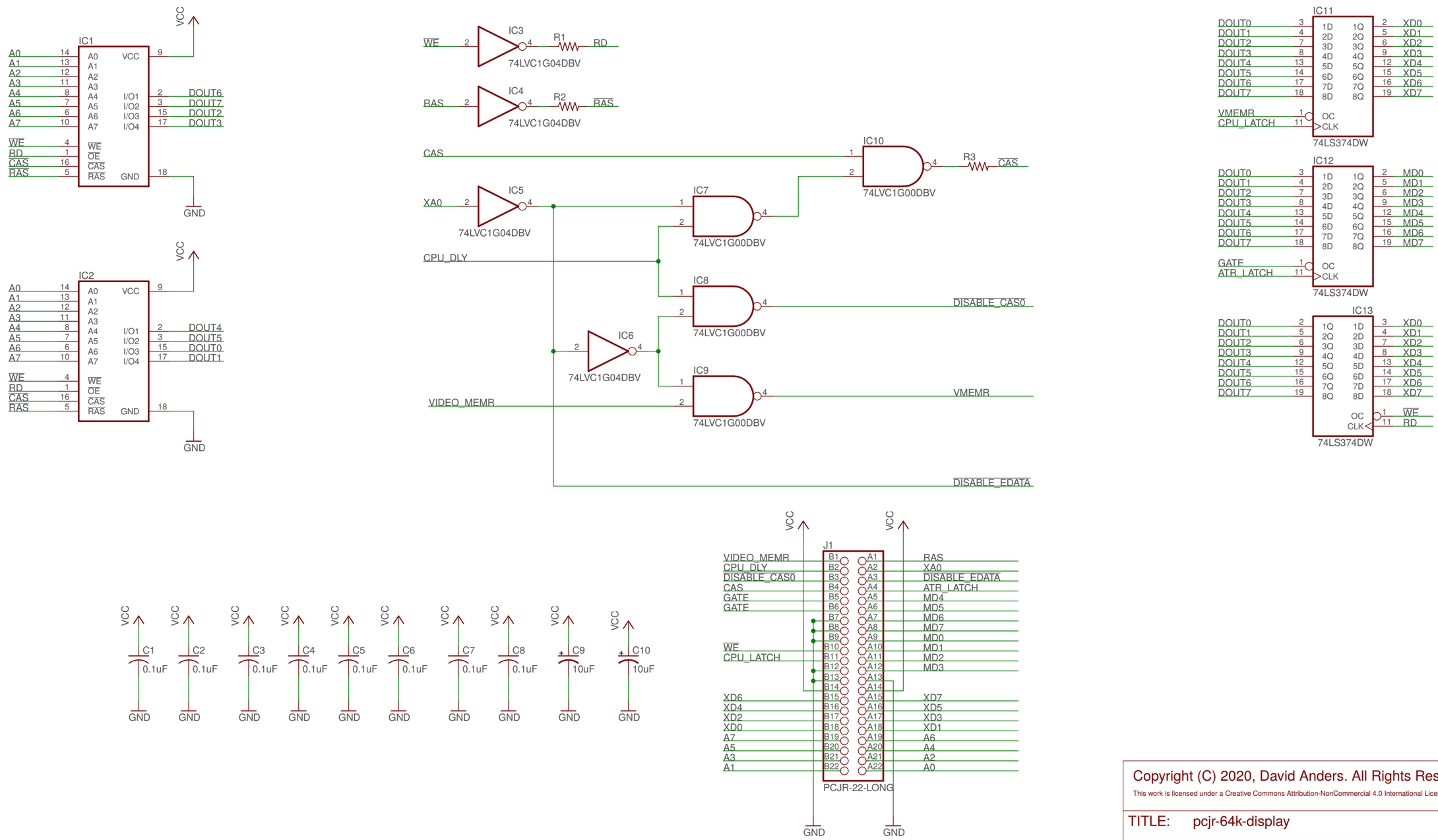

Copyright (C) 2020, David Anders. All Rights Reserved.

This work is licensed under a Creative Commons Attribution-NonCommercial 4.0 International License. CC-BY-NC 4.0

TITLE: pcjr-64k-display

Document Number: Dave's Dev Lab

REV: B

Date: 6/18/20 10:44 PM

Sheet: 1/1