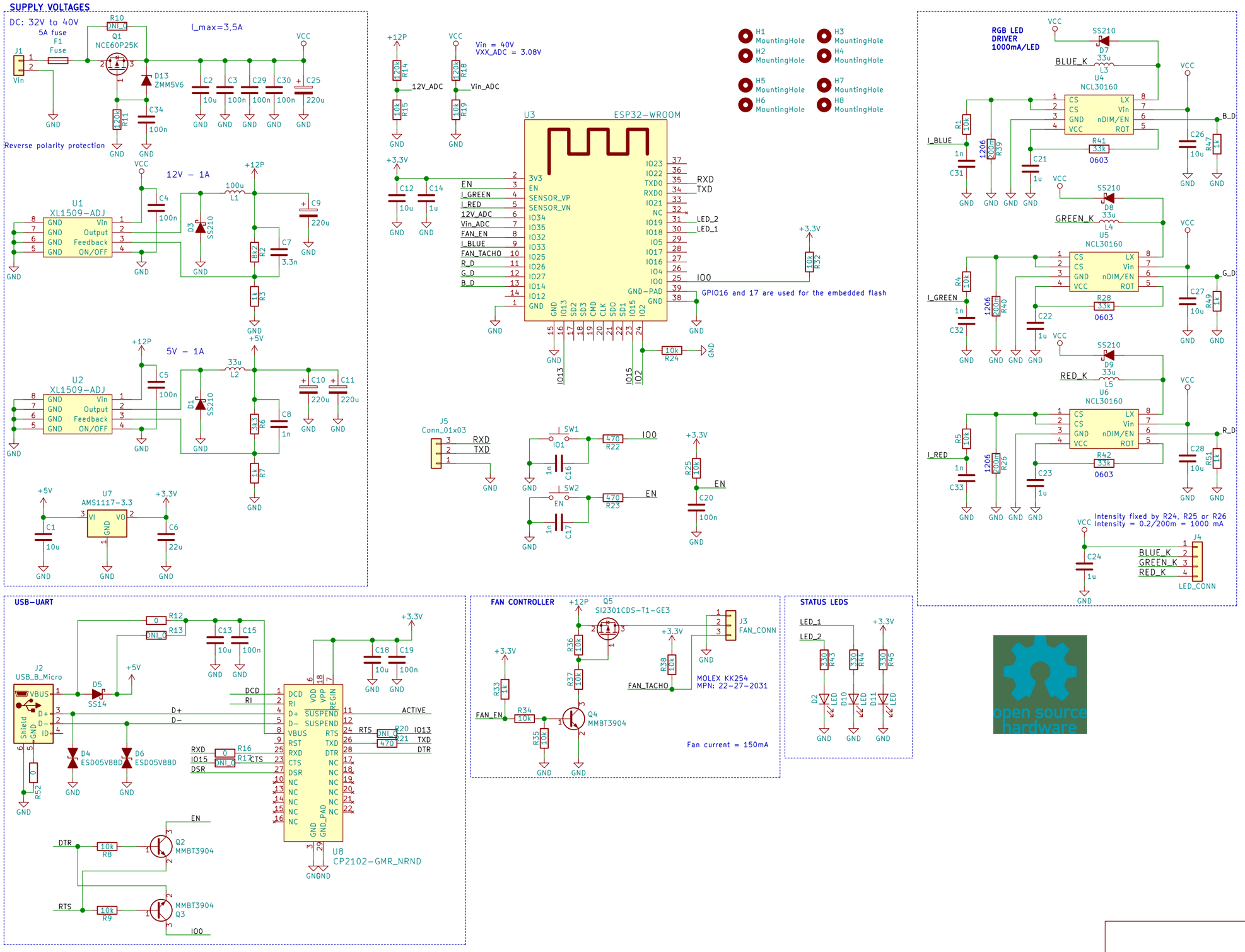

Sheet: /	
File: RGB_LED_Driver_v3.sch	
Title: ESP32 – 100W RGB LED Controller	
Size: A3 Date:	Rev: 1
KiCad E.D.A. kicad (5.0.1-3-g963ef8bb5)	Id: 1/1