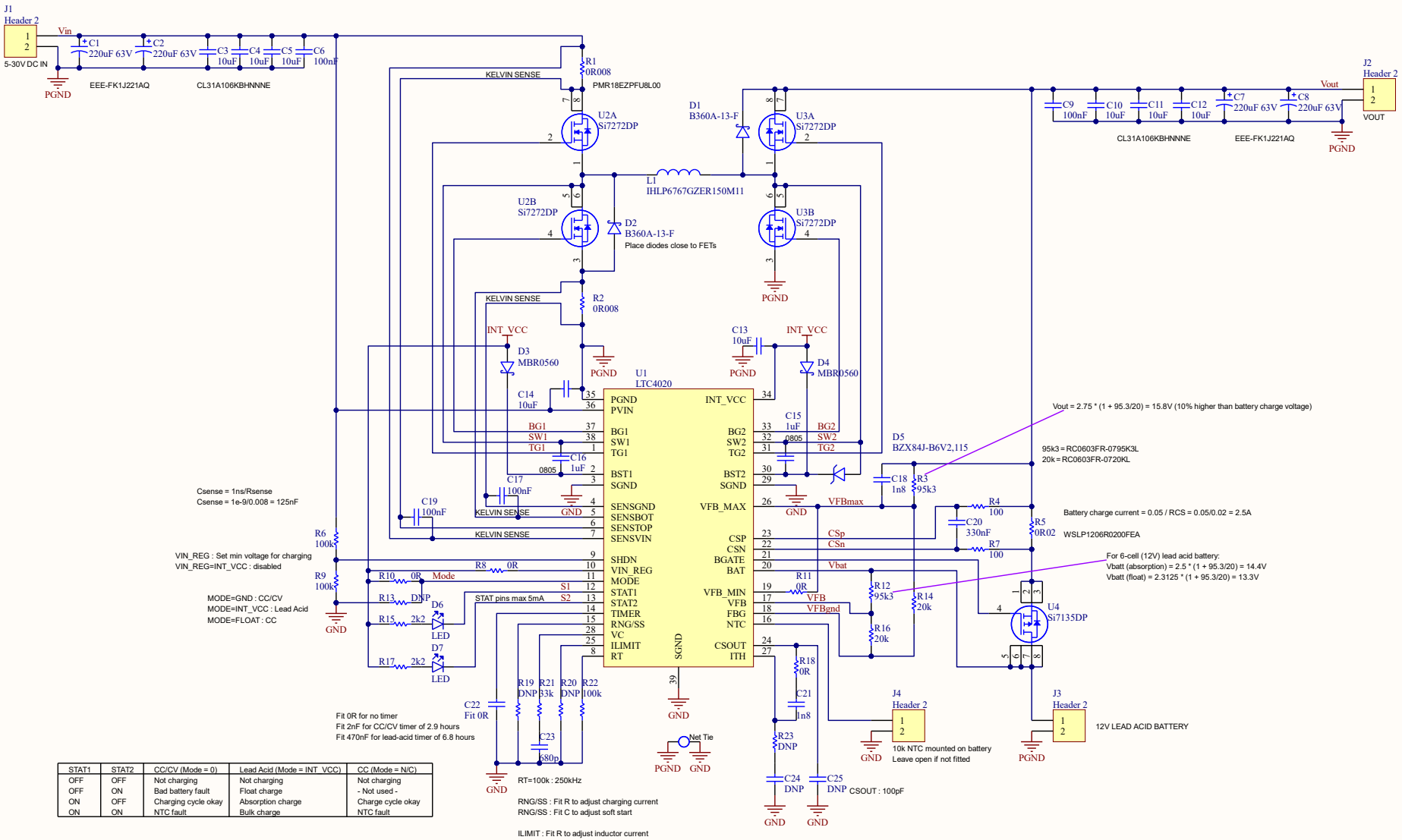

STAT1	STAT2	CC/CV (Mode = 0)	Lead Acid (Mode = INT_VCC)	CC (Mode = N/C)
OFF	OFF	Not charging	Not charging	Not charging
OFF	ON	Bad battery fault	Float charge	- Not used -
ON	OFF	Charging cycle okay	Absorption charge	Charge cycle okay
ON	ON	NTC fault	Bulk charge	NTC fault

DC-DC BATTERY CHARGER
by STEVEN J. MERRIFIELD