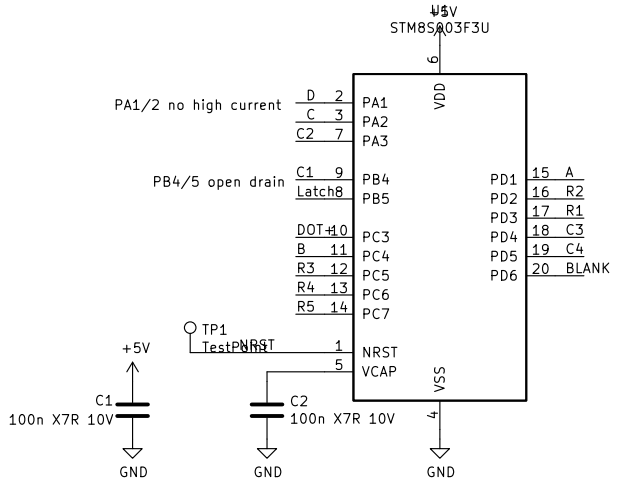

PD1/SWIM is on Pin Bit0 ->Pinheder

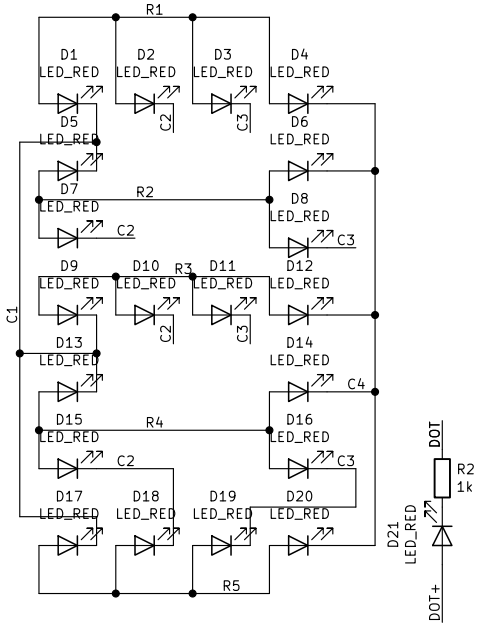

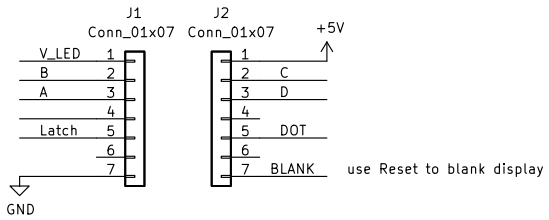

Sheet: /
File: uTIL.sch

Title:

Size: A4	Date:	**Rev:**
KiCad E.D.A. eeschema (5.99.0-12646-gda79a3dd69)		Id: 1/1