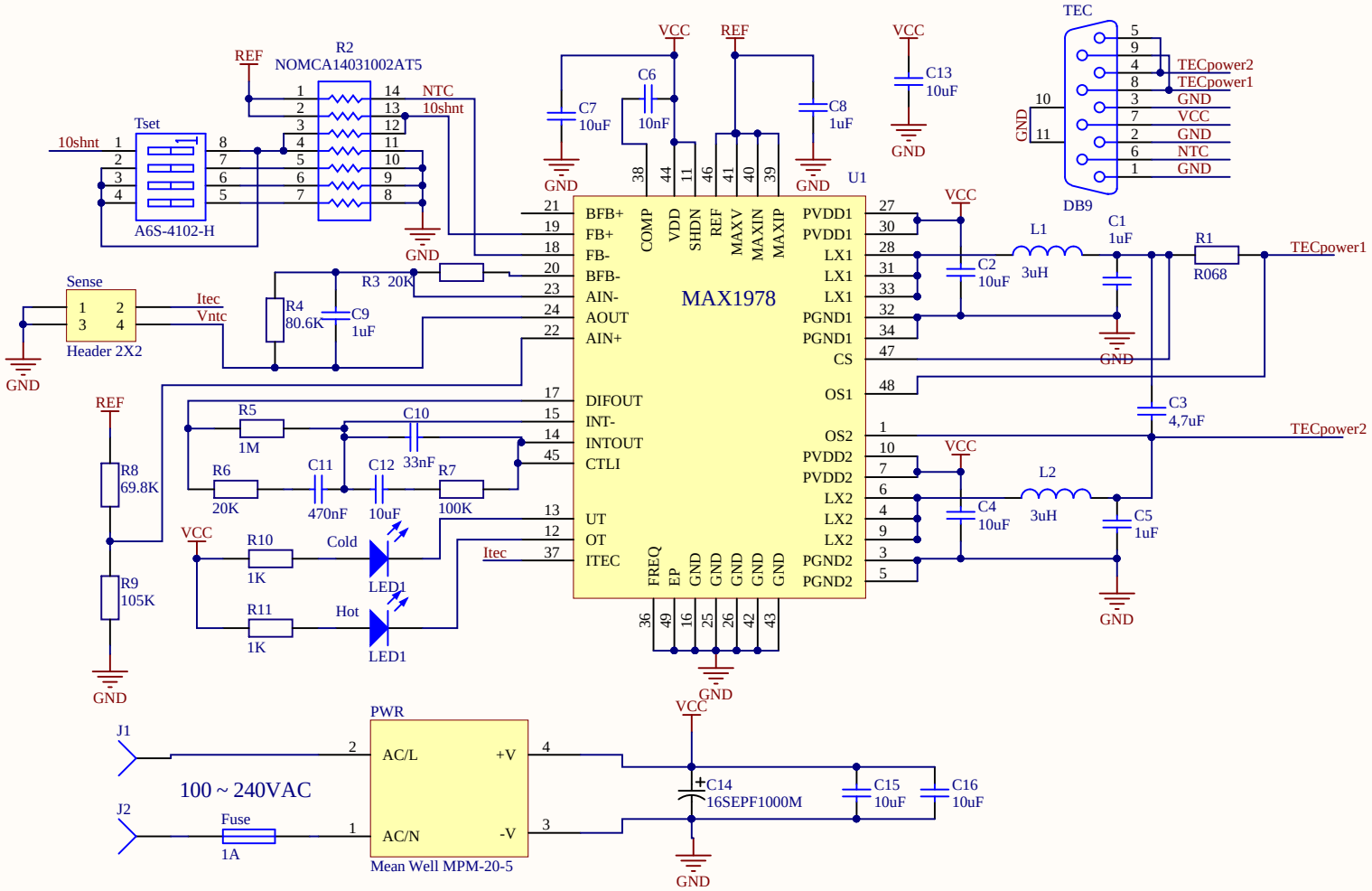
MAX1978
U1
BFB+
FB+
FB-
BFB-
AIN-
AOUT
AIN+
DIFOUT
INT-
INTOUT
CTLI
UT
OT
ITEC
COMP
VDD
SHDN
REF
MAXV
MAXIN
MAXIP
FREQ
EP
GND
PVDD1
LX1
PGND1
CS
OS1
OS2
PVDD2
LX2
PGND2
VCC
REF
GND
C7
10uF
C6
10nF
C8
1uF
C13
10uF
TEC
DB9
TECpower2
TECpower1
GND
VCC
NTC
L1
3uH
C1
1uF
R1
R068
C2
10uF
C3
4,7uF
L2
3uH
C4
10uF
C5
1uF
R2
NOMCA14031002AT5
NTC
10shnt
Tset
A6S-4102-H
R3 20K
R4
80.6K
C9
1uF
Sense
Header 2X2
Itec
Vntc
R5
1M
C10
33nF
R6
20K
C11
470nF
C12
10uF
R7
100K
R8
69.8K
R9
105K
R10
1K
R11
1K
Cold
Hot
LED1
PWR
AC/L
AC/N
+V
-V
Mean Well MPM-20-5
J1
J2
100 ~ 240VAC
Fuse
1A
C14
16SEPF1000M
C15
10uF
C16
10uF