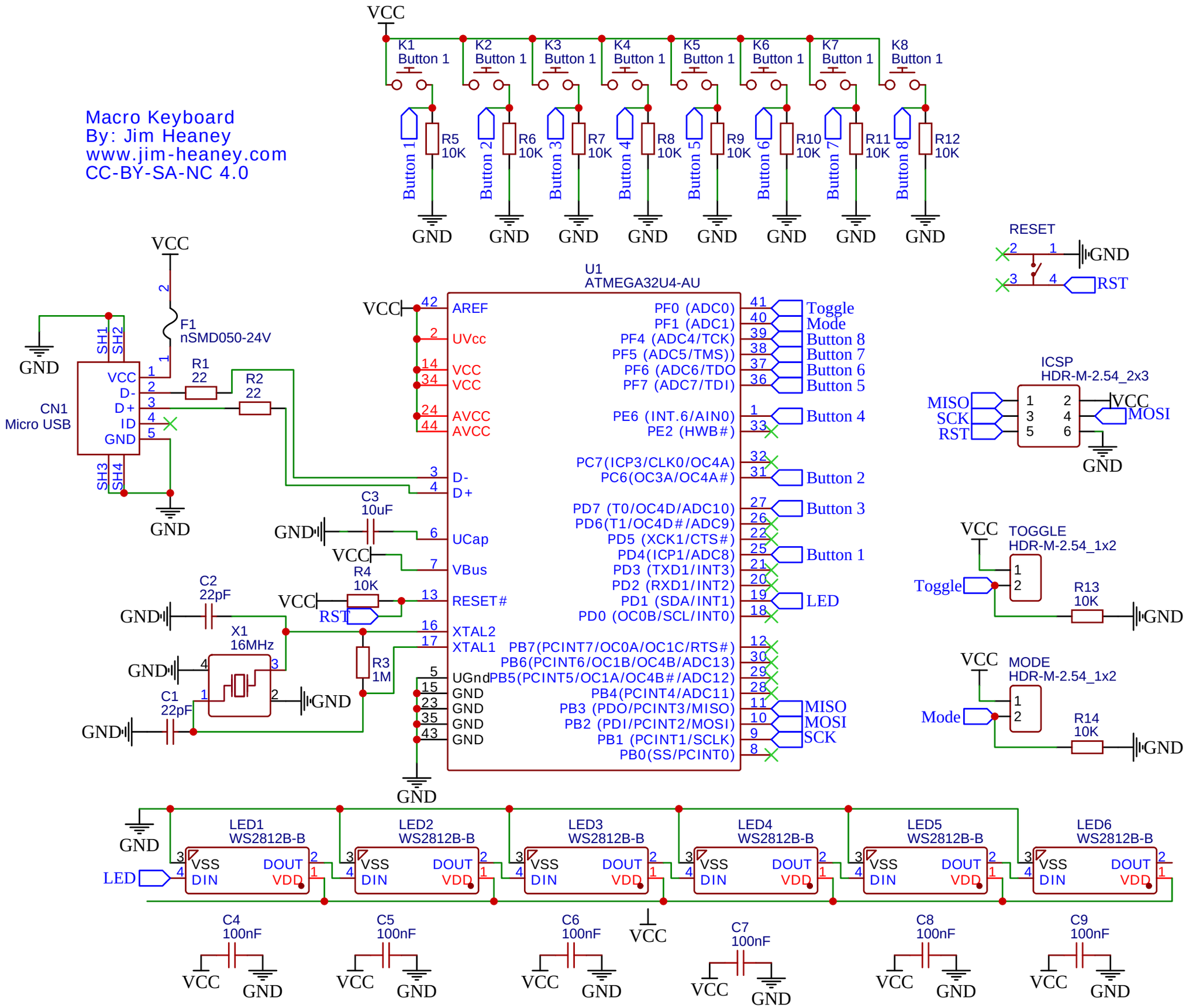
Macro Keyboard
By: Jim Heaney
www.jim-heaney.com
CC-BY-SA-NC 4.0
VCC
K1 Button 1
K2 Button 1
K3 Button 1
K4 Button 1
K5 Button 1
K6 Button 1
K7 Button 1
K8 Button 1
R5 10K
R6 10K
R7 10K
R8 10K
R9 10K
R10 10K
R11 10K
R12 10K
Button 1
Button 2
Button 3
Button 4
Button 5
Button 6
Button 7
Button 8
GND
RESET
RST
U1
ATMEGA32U4-AU
F1
nSMD050-24V
CN1
Micro USB
SH1
SH2
SH3
SH4
R1 22
R2 22
C3 10uF
R4 10K
C2 22pF
C1 22pF
X1 16MHz
R3 1M
AREF
UVcc
VCC
AVCC
D-
D+
UCap
VBus
RESET#
XTAL2
XTAL1
UGnd
PF0 (ADC0)
PF1 (ADC1)
PF4 (ADC4/TCK)
PF5 (ADC5/TMS))
PF6 (ADC6/TDO
PF7 (ADC7/TDI)
PE6 (INT.6/AIN0)
PE2 (HWB#)
PC7(ICP3/CLK0/OC4A)
PC6(OC3A/OC4A#)
PD7 (T0/OC4D/ADC10)
PD6(T1/OC4D#/ADC9)
PD5 (XCK1/CTS#)
PD4(ICP1/ADC8)
PD3 (TXD1/INT3)
PD2 (RXD1/INT2)
PD1 (SDA/INT1)
PD0 (OC0B/SCL/INT0)
PB7(PCINT7/OC0A/OC1C/RTS#)
PB6(PCINT6/OC1B/OC4B/ADC13)
PB5(PCINT5/OC1A/OC4B#/ADC12)
PB4(PCINT4/ADC11)
PB3 (PDO/PCINT3/MISO)
PB2 (PDI/PCINT2/MOSI)
PB1 (PCINT1/SCLK)
PB0(SS/PCINT0)
Toggle
Mode
LED
MISO
MOSI
SCK
ICSP
HDR-M-2.54_2x3
TOGGLE
HDR-M-2.54_1x2
MODE
HDR-M-2.54_1x2
R13 10K
R14 10K
LED1 WS2812B-B
LED2 WS2812B-B
LED3 WS2812B-B
LED4 WS2812B-B
LED5 WS2812B-B
LED6 WS2812B-B
VSS
DIN
DOUT
VDD
C4 100nF
C5 100nF
C6 100nF
C7 100nF
C8 100nF
C9 100nF