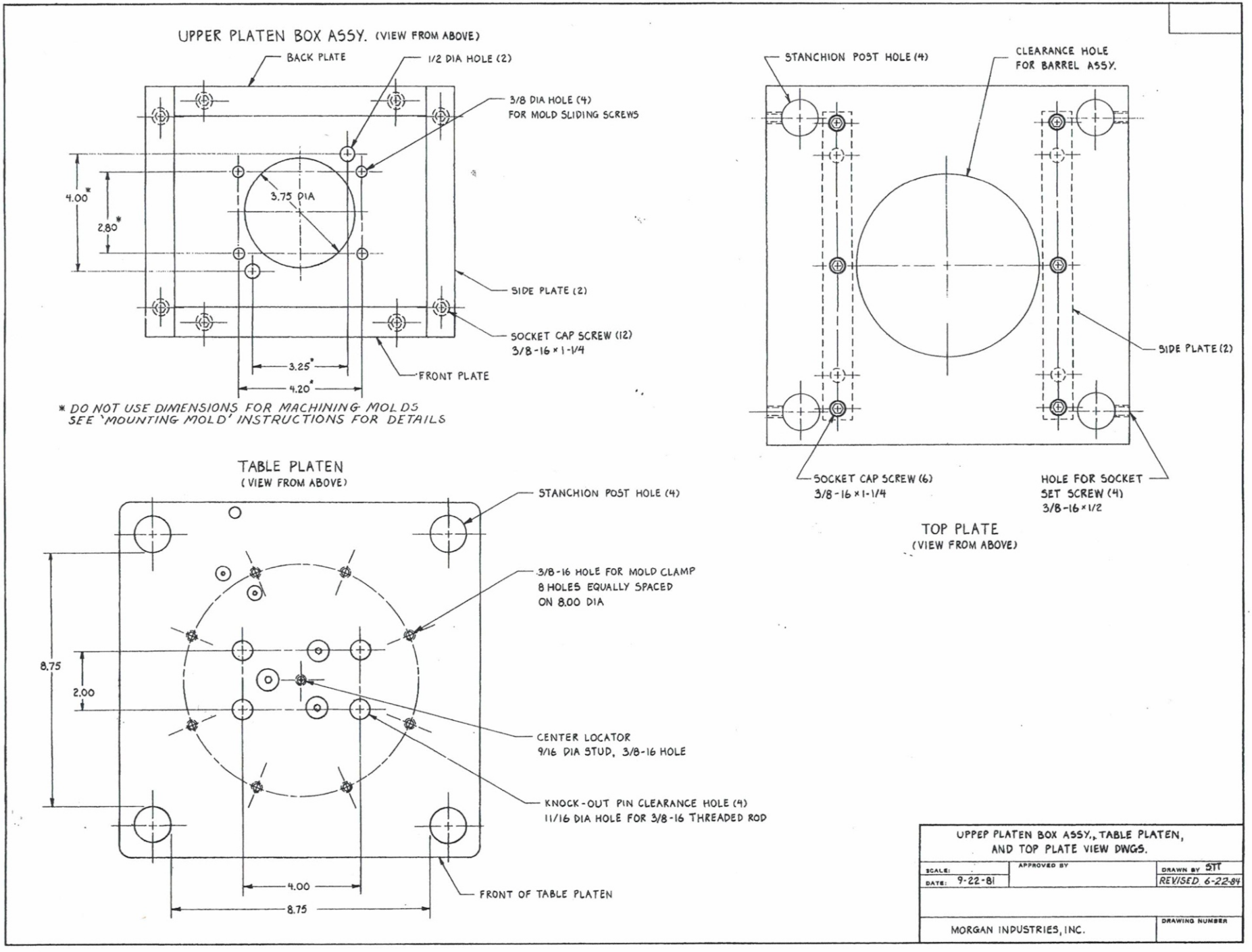
UPPER PLATEN BOX ASSY. (VIEW FROM ABOVE)
BACK PLATE
1/2 DIA HOLE (2)
3/8 DIA HOLE (4)
FOR MOLD SLIDING SCREWS
3.75 DIA
4.00*
2.80*
SIDE PLATE (2)
SOCKET CAP SCREW (12)
3/8-16 × 1-1/4
FRONT PLATE
3.25*
4.20*
* DO NOT USE DIMENSIONS FOR MACHINING MOLDS
SEE 'MOUNTING MOLD' INSTRUCTIONS FOR DETAILS
TABLE PLATEN
(VIEW FROM ABOVE)
STANCHION POST HOLE (4)
3/8-16 HOLE FOR MOLD CLAMP
8 HOLES EQUALLY SPACED
ON 8.00 DIA
8.75
2.00
CENTER LOCATOR
9/16 DIA STUD, 3/8-16 HOLE
KNOCK-OUT PIN CLEARANCE HOLE (4)
11/16 DIA HOLE FOR 3/8-16 THREADED ROD
4.00
8.75
FRONT OF TABLE PLATEN
STANCHION POST HOLE (4)
CLEARANCE HOLE
FOR BARREL ASSY.
SIDE PLATE (2)
SOCKET CAP SCREW (6)
3/8-16 × 1-1/4
HOLE FOR SOCKET
SET SCREW (4)
3/8-16 × 1/2
TOP PLATE
(VIEW FROM ABOVE)
UPPEP PLATEN BOX ASSY., TABLE PLATEN,
AND TOP PLATE VIEW DWGS.
SCALE:
DATE: 9-22-81
APPROVED BY
DRAWN BY STT
REVISED 6-22-84
MORGAN INDUSTRIES, INC.
DRAWING NUMBER