Program Counter

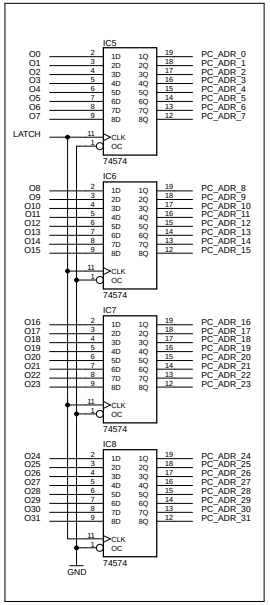

MUX

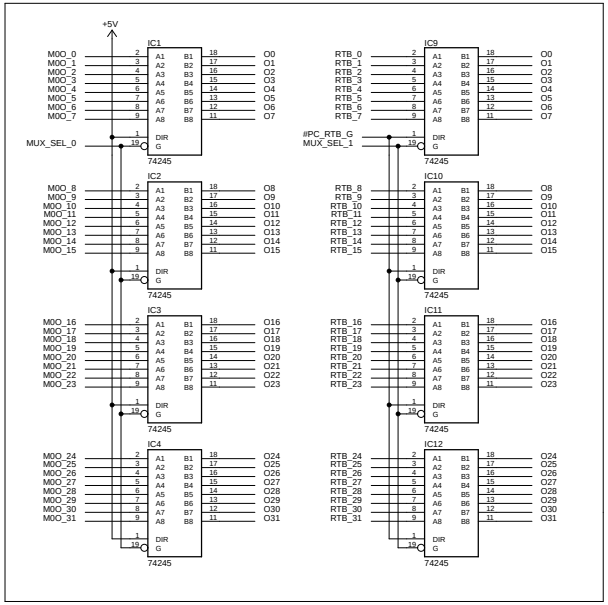

Program Counter Logic

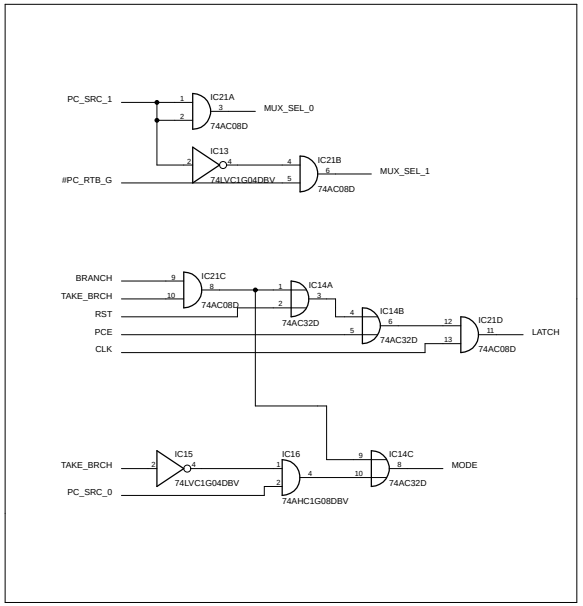

RTB_IMM_MUX (SEL. 2)

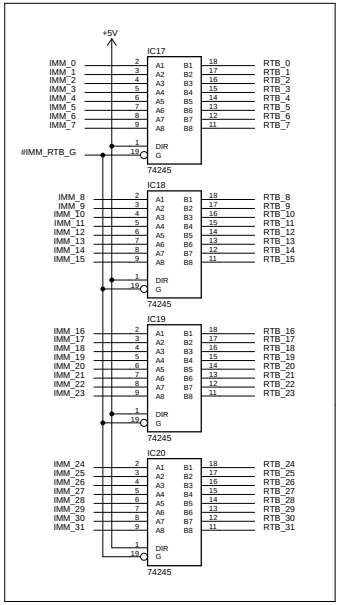

ALU_MUX (SEL. 2)

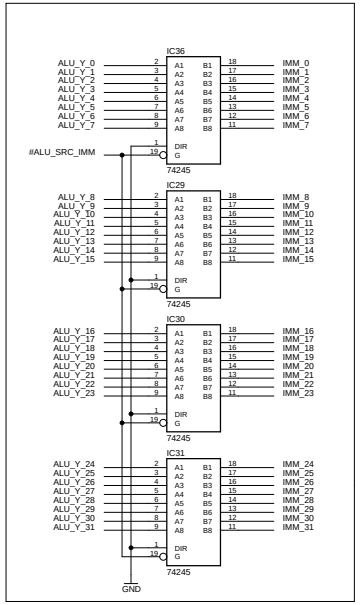

Program Counter Adder

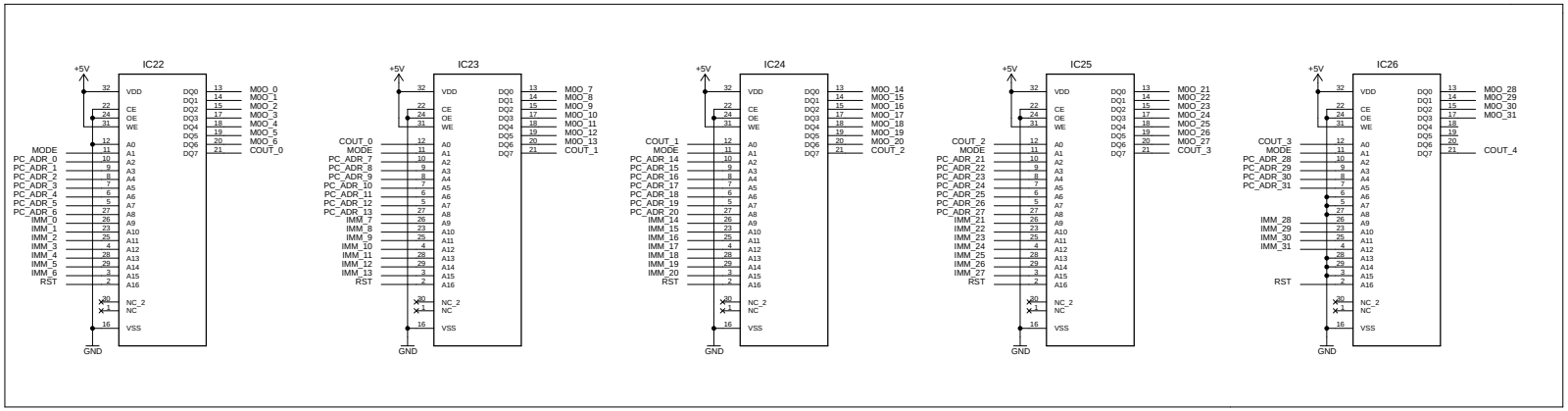

Decoupling capacitors

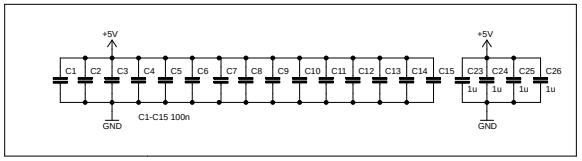

Extra gates

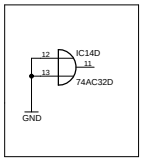

PROGRAM COUNTER
28/10/2020
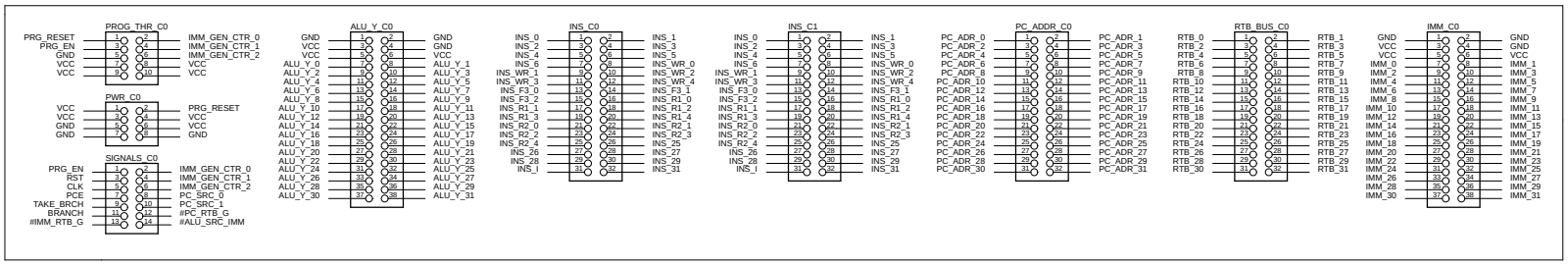
Connectors