Control decoder

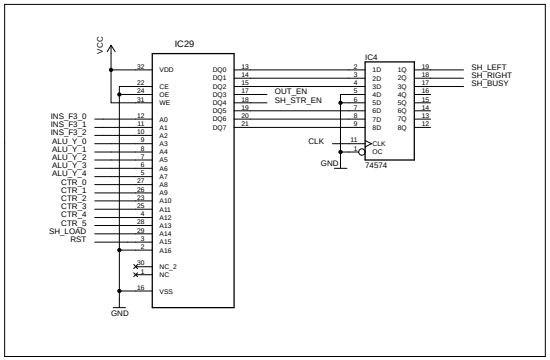

Control logic

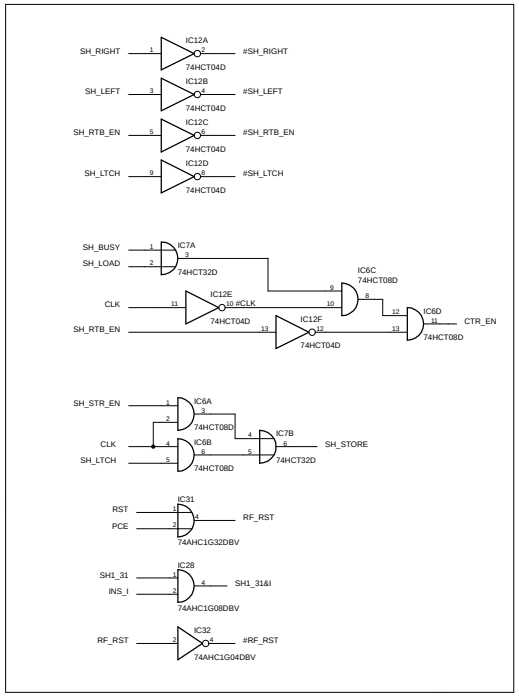

Shifer unit

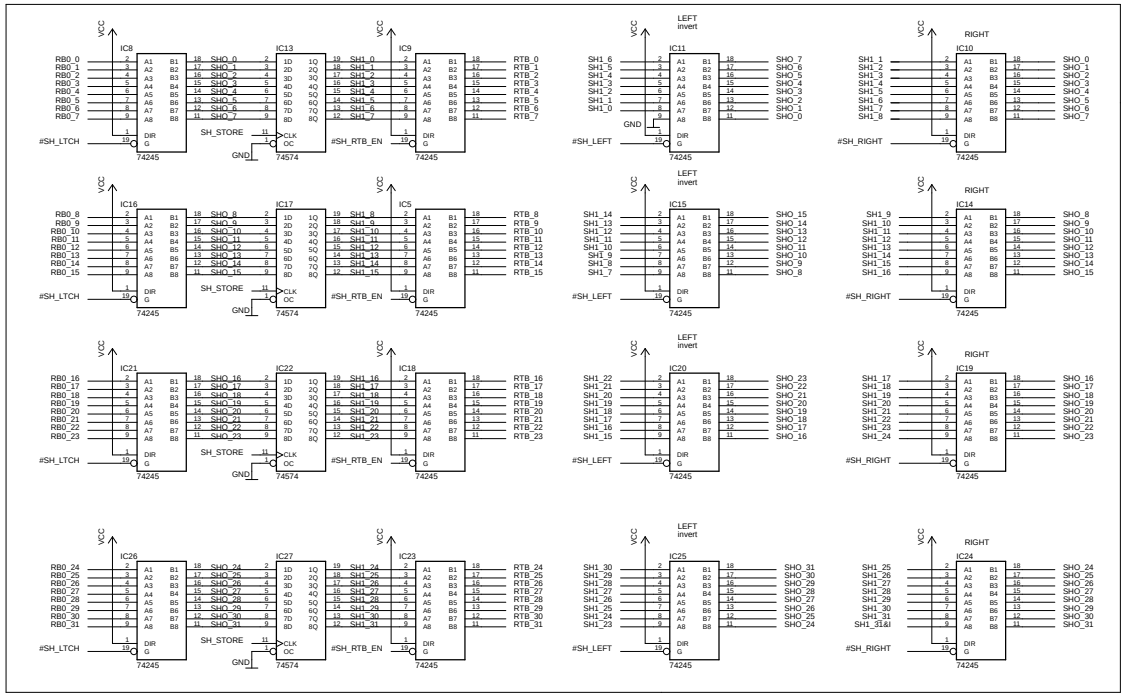

Power

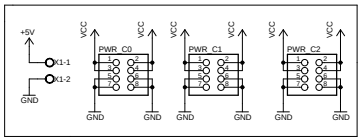

Pull-down resistors

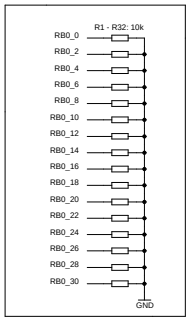

LED indicator

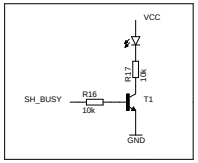

Unused gates

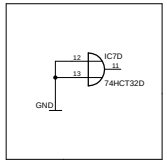

Decoupling capacitors

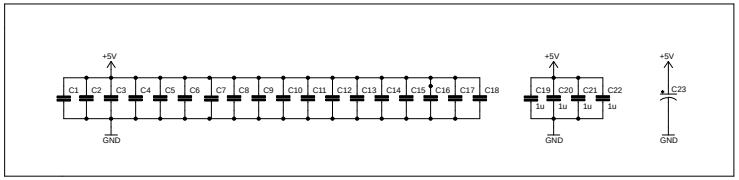

Counter

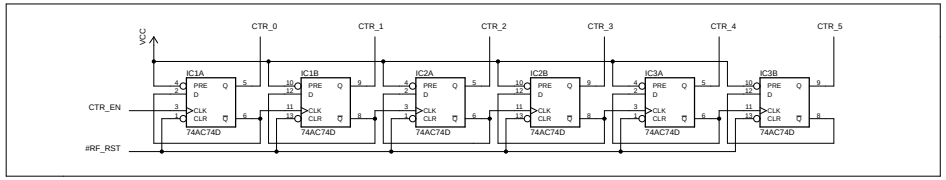

RTB_EN latch

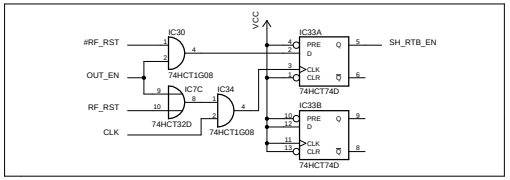

Connectors

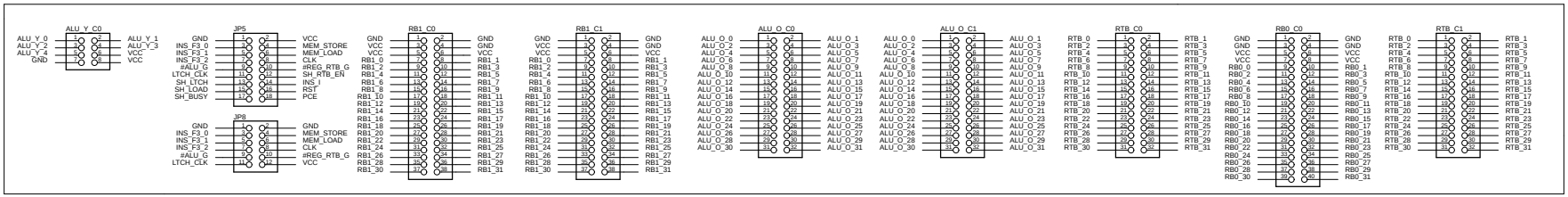

SHIFTER
28/10/2020