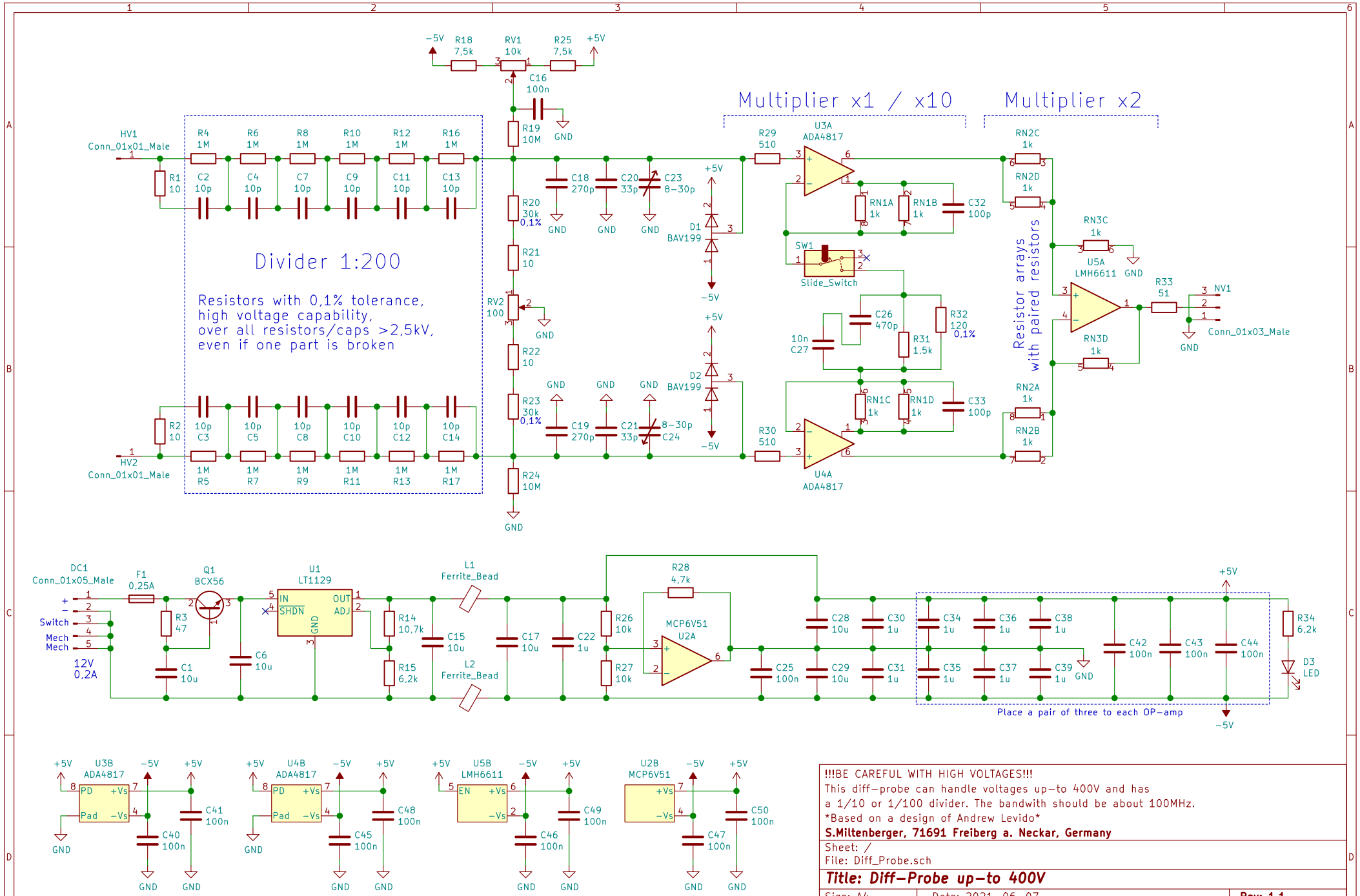

!!!BE CAREFUL WITH HIGH VOLTAGES!!!
This diff-probe can handle voltages up-to 400V and has
a 1/10 or 1/100 divider. The bandwith should be about 100MHz.
Based on a design of Andrew Levido

S.Miltenberger, 71691 Freiberg a. Neckar, Germany

Sheet: /
File: Diff_Probe.sch

Title: Diff-Probe up-to 400V

Size: A4	Date: 2021-06-07	**Rev: 1.1**
KiCad E.D.A. kicad (5.0.0)		Id: 1/1