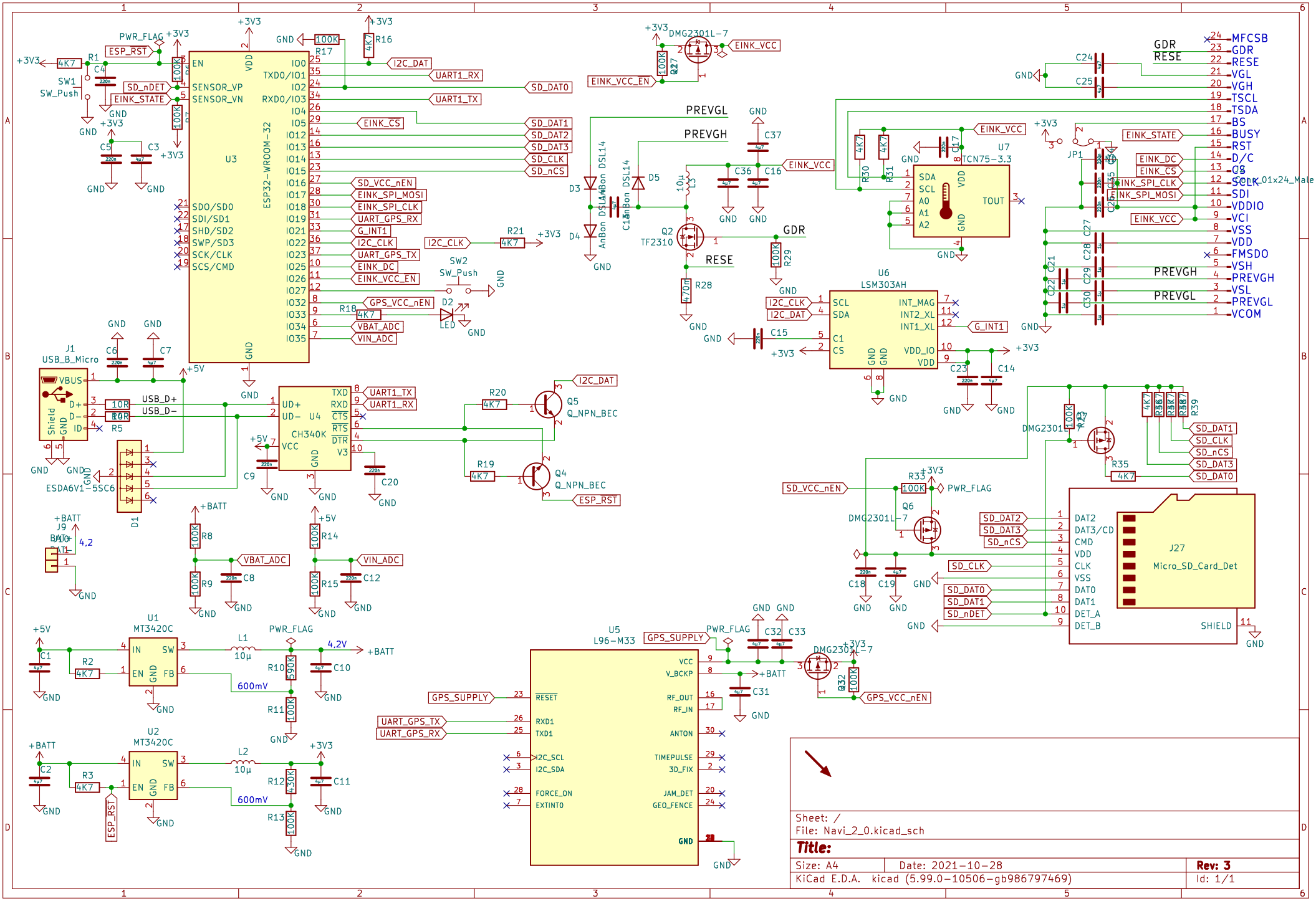
U3
ESP32-WROOM-32
EN
SENSOR_VP
SENSOR_VN
SDO/SD0
SDI/SD1
SHD/SD2
SWP/SD3
SCK/CLK
SCS/CMD
VDD
GND
I00
TXD0/I01
I02
RXD0/I03
I04
I05
I012
I013
I014
I015
I016
I017
I018
I019
I021
I022
I023
I025
I026
I027
I032
I033
I034
I035
ESP_RST
SD_nDET
EINK_STATE
I2C_DAT
UART1_RX
SD_DAT0
UART1_TX
EINK_CS
SD_DAT1
SD_DAT2
SD_DAT3
SD_CLK
SD_nCS
SD_VCC_nEN
EINK_SPI_MOSI
EINK_SPI_CLK
UART_GPS_RX
G_INT1
I2C_CLK
UART_GPS_TX
EINK_DC
EINK_VCC_EN
GPS_VCC_nEN
VBAT_ADC
VIN_ADC
SW1
SW_Push
SW2
SW_Push
LED
D2
R16
R17
R18
R21
DMG2301L-7
Q7
EINK_VCC
EINK_VCC_EN
PREVGL
PREVGH
GDR
RESE
D3
D4
D5
DSL114
AnBon
L3
10µ
Q2
TF2310
R28
470m
R29
C36
C37
C16
U7
TCN75-3.3
SDA
SCL
A0
A1
A2
TOUT
R30
R31
JP1
Conn_01x24_Male
MFCSB
GDR
RESE
VGL
VGH
TSCL
TSDA
BS
BUSY
RST
D/C
CS
SCLK
SDI
VDDIO
VCI
VSS
VDD
FMSDO
VSH
PREVGH
VSL
PREVGL
VCOM
U6
LSM303AH
SCL
SDA
C1
CS
INT_MAG
INT2_XL
INT1_XL
VDD_IO
VDD
C15
C23
C14
J1
USB_B_Micro
VBUS
D+
D-
ID
Shield
USB_D+
USB_D-
R5
ESDA6V1-5SC6
D1
U4
CH340K
UD+
UD-
VCC
TXD
RXD
CTS
RTS
DTR
V3
C9
C20
R20
R19
Q5
Q4
Q_NPN_BEC
J9
BAT+
BAT-
R8
R9
R14
R15
C8
C12
U1
MT3420C
IN
SW
EN
GND
FB
L1
10µ
R10
590K
R11
100K
C10
C1
R2
4K7
4,2V
+BATT
600mV
U2
MT3420C
L2
10µ
R12
430K
R13
100K
C11
C2
R3
4K7
U5
L96-M33
RESET
RXD1
TXD1
I2C_SCL
I2C_SDA
FORCE_ON
EXTINT0
VCC
V_BCKP
RF_OUT
RF_IN
ANTON
TIMEPULSE
3D_FIX
JAM_DET
GEO_FENCE
GND
GPS_SUPPLY
UART_GPS_TX
UART_GPS_RX
C32
C33
C31
R32
GPS_VCC_nEN
Q6
DMG2301L-7
R33
R35
4K7
R34
R36
R37
R38
R39
J27
Micro_SD_Card_Det
DAT2
DAT3/CD
CMD
VDD
CLK
VSS
DAT0
DAT1
DET_A
DET_B
SHIELD
C18
C19
Sheet: /
File: Navi_2_0.kicad_sch
Title:
Size: A4
Date: 2021-10-28
Rev: 3
KiCad E.D.A. kicad (5.99.0-10506-gb986797469)
Id: 1/1