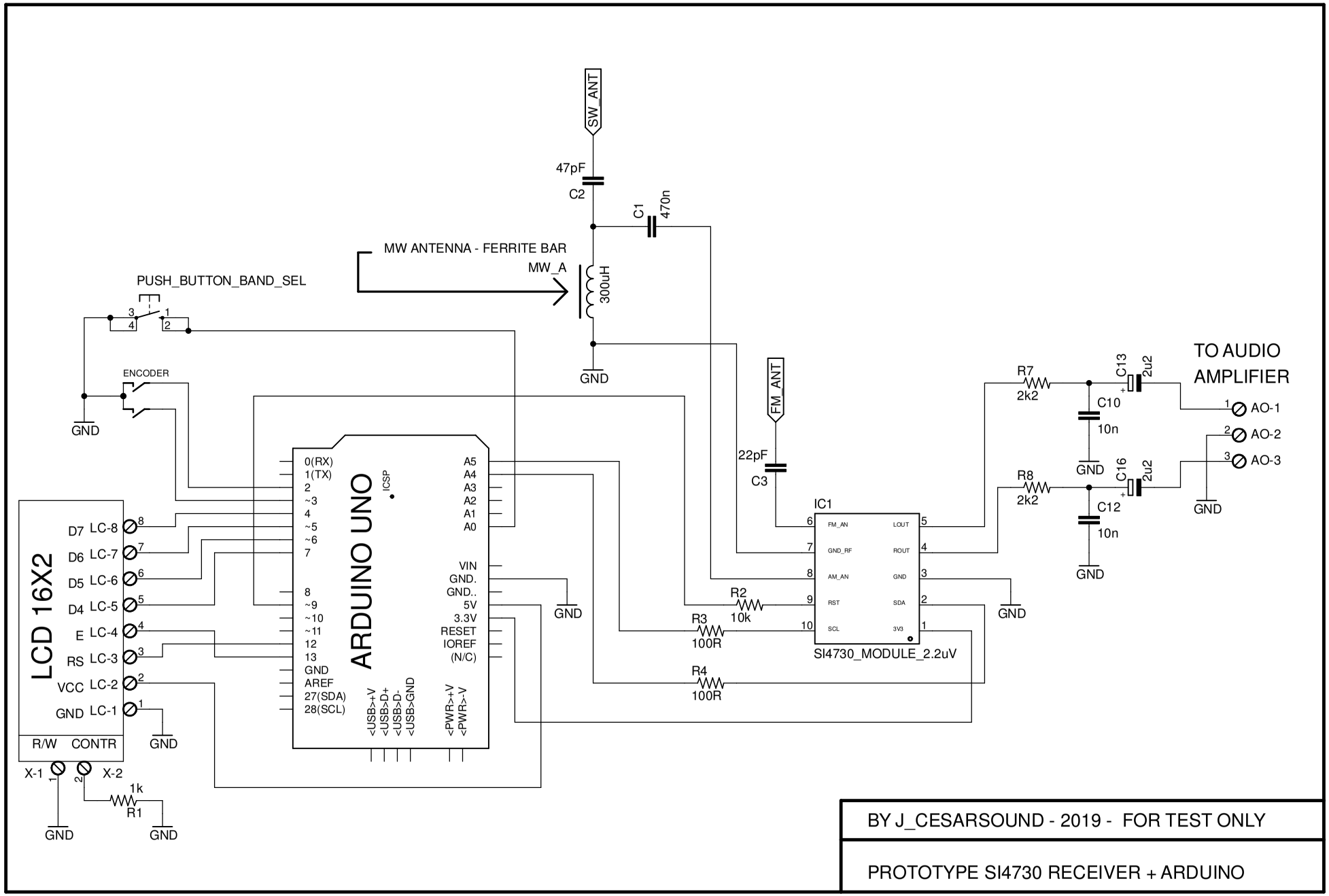
SW_ANT
47pF
C2
C1
470n
MW ANTENNA - FERRITE BAR
MW_A
300uH
GND
PUSH_BUTTON_BAND_SEL
ENCODER
FM_ANT
22pF
C3
IC1
FM_AN
GND_RF
AM_AN
RST
SCL
LOUT
ROUT
GND
SDA
3V3
SI4730_MODULE_2.2uV
R2
10k
R3
100R
R4
100R
R7
2k2
R8
2k2
C10
10n
C12
10n
C13
2u2
C16
2u2
TO AUDIO
AMPLIFIER
AO-1
AO-2
AO-3
ARDUINO UNO
ICSP
0(RX)
1(TX)
2
~3
4
~5
~6
7
8
~9
~10
~11
12
13
GND
AREF
27(SDA)
28(SCL)
A5
A4
A3
A2
A1
A0
VIN
GND.
GND..
5V
3.3V
RESET
IOREF
(N/C)
<USB>+V
<USB>D+
<USB>D-
<USB>GND
<PWR>+V
<PWR>-V
LCD 16X2
D7 LC-8
D6 LC-7
D5 LC-6
D4 LC-5
E LC-4
RS LC-3
VCC LC-2
GND LC-1
R/W CONTR
X-1
X-2
1k
R1
BY J_CESARSOUND - 2019 - FOR TEST ONLY
PROTOTYPE SI4730 RECEIVER + ARDUINO