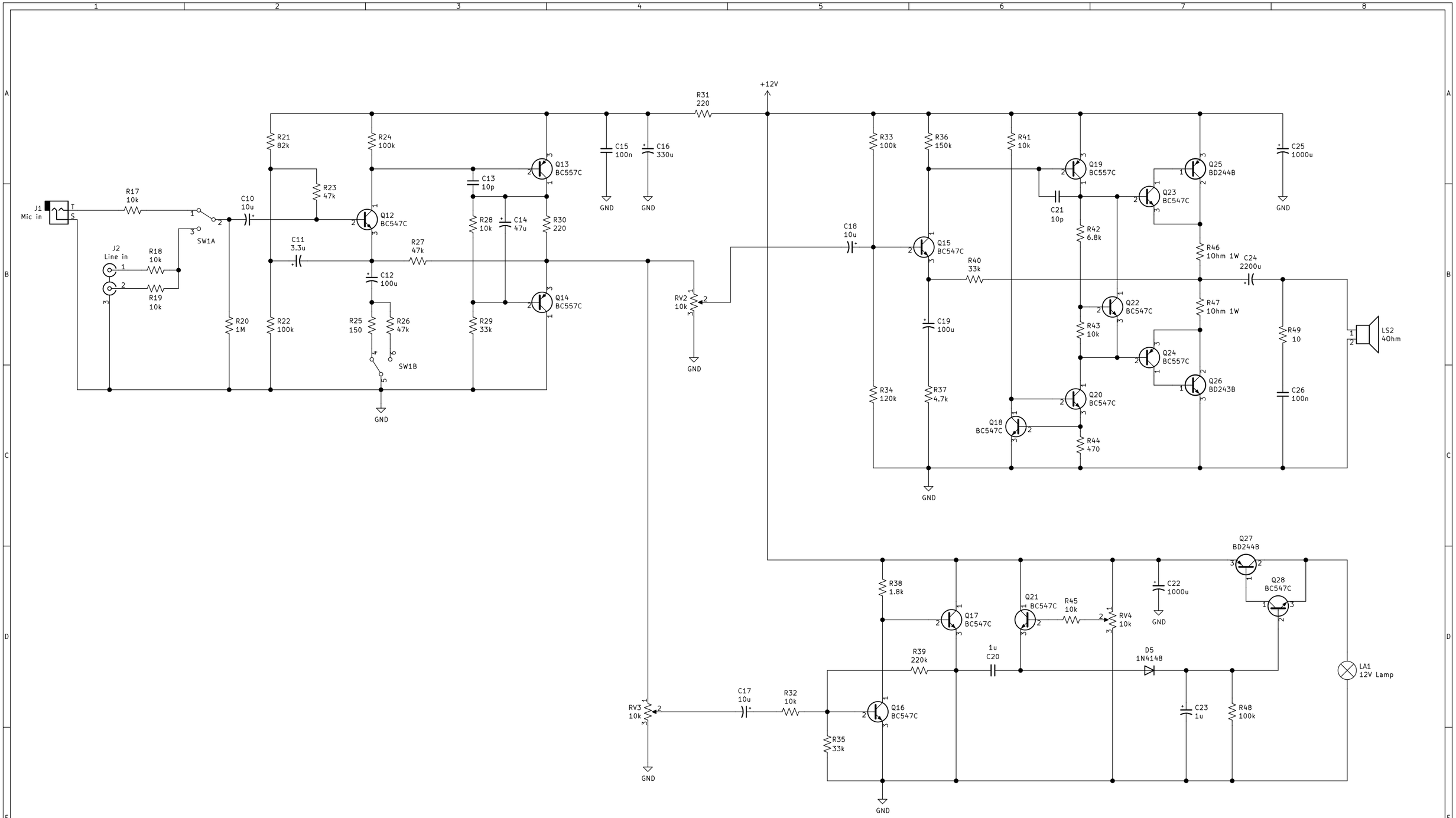

Sheet: /Main_Control_Assembly/
File: Main_Control_Assembly.sch

Title: Main Control Assembly

Size: A3	Date:	**Rev: 1**
KiCad E.D.A. kicad (5.1.6)-1		Id: 3/3