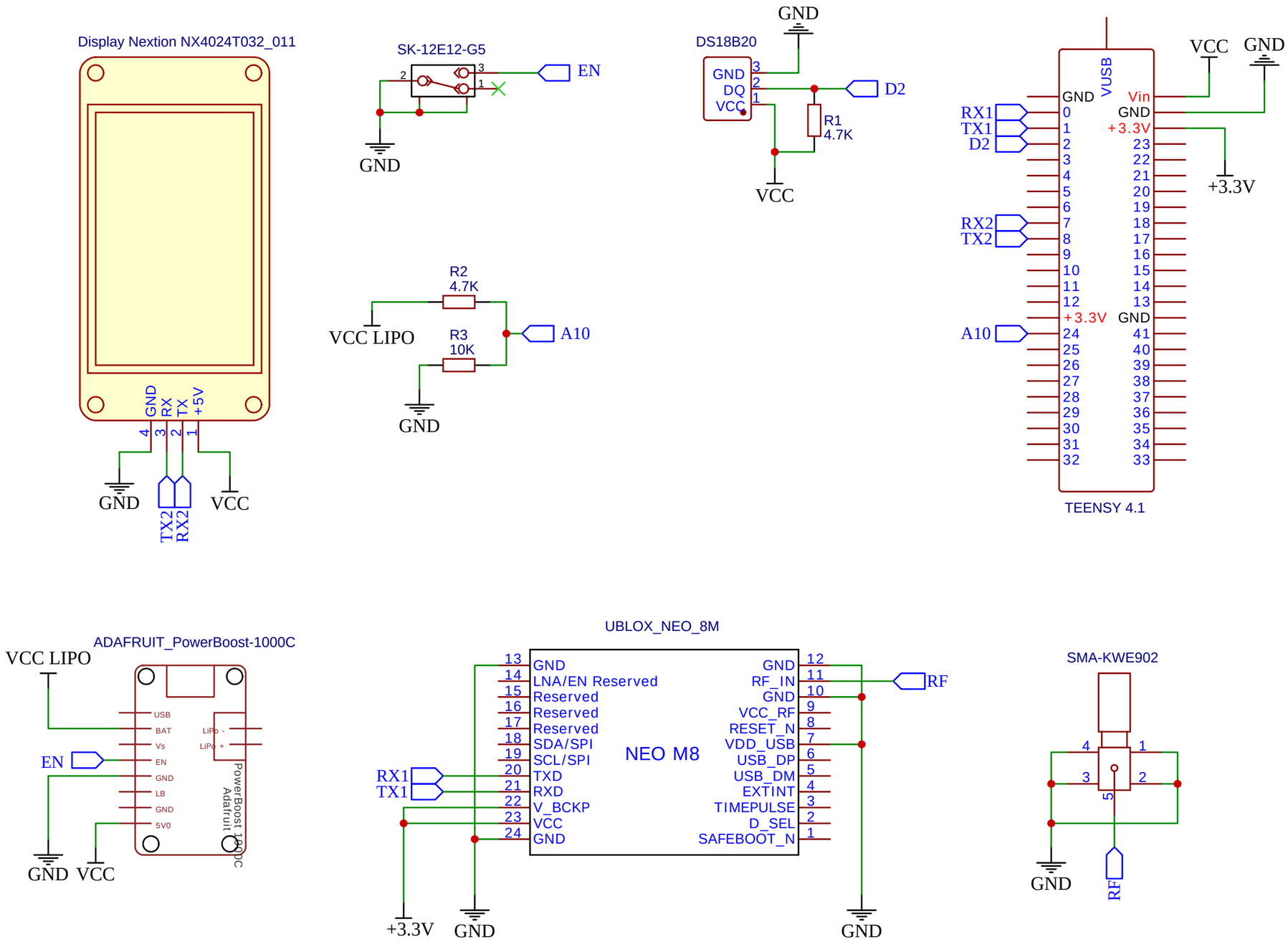

TITLE: Globosat	REV: 1.0
Company:	Sheet: 1/1
Date: 2021-02-22	Drawn By: Giovanni Bertazzoni