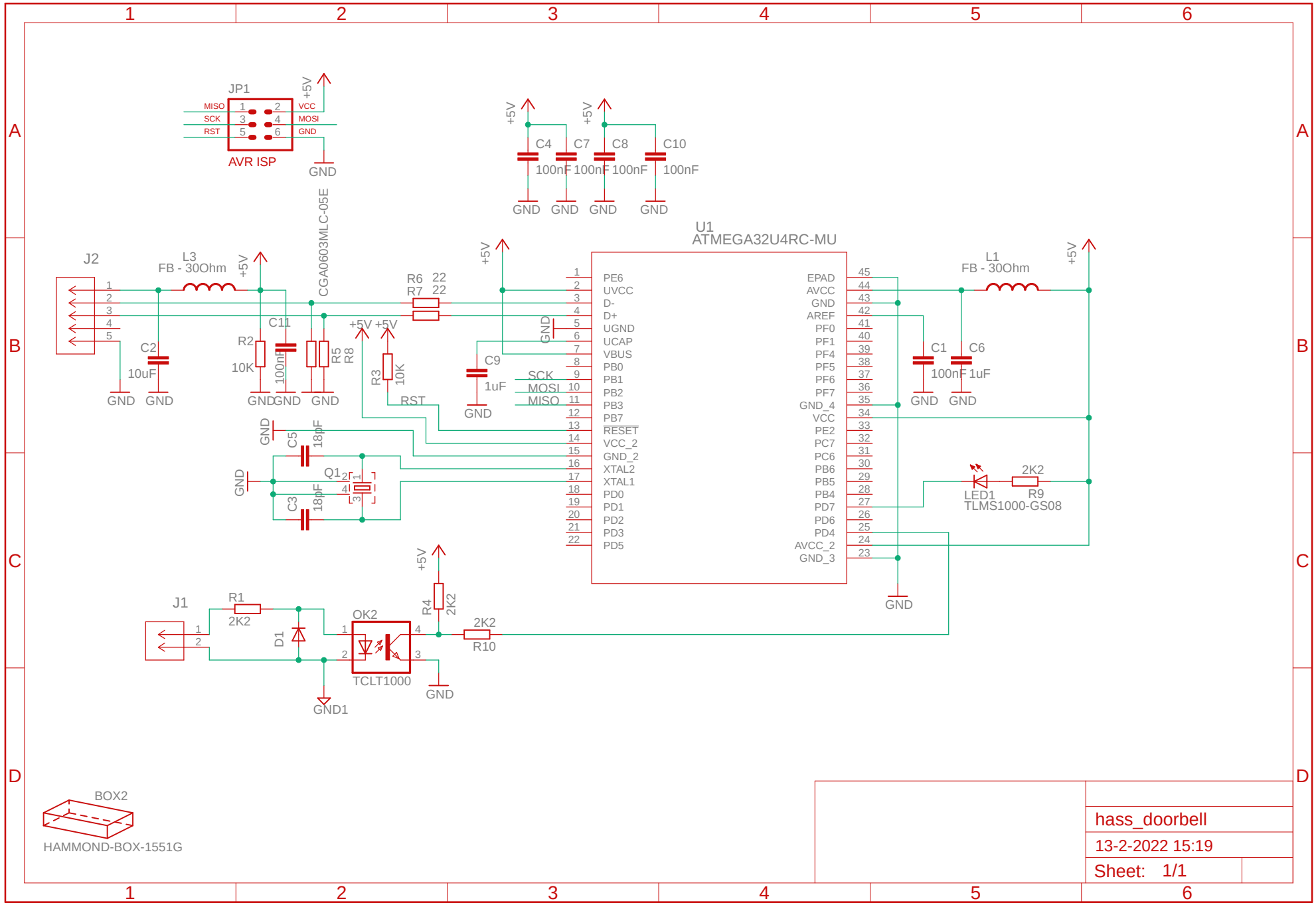
JP1
MISO
SCK
RST
VCC
MOSI
GND
AVR ISP
+5V
GND
C4 100nF
C7 100nF
C8 100nF
C10 100nF
U1
ATMEGA32U4RC-MU
PE6
UVCC
D-
D+
UGND
UCAP
VBUS
PB0
PB1
PB2
PB3
PB7
RESET
VCC_2
GND_2
XTAL2
XTAL1
PD0
PD1
PD2
PD3
PD5
EPAD
AVCC
GND
AREF
PF0
PF1
PF4
PF5
PF6
PF7
GND_4
VCC
PE2
PC7
PC6
PB6
PB5
PB4
PD7
PD6
PD4
AVCC_2
GND_3
J2
L3
FB - 30Ohm
CGA0603MLC-05E
C2 10uF
R2 10K
C11 100nF
R5 R8
R6 22
R7 22
R3 10K
RST
C9 1uF
SCK
MOSI
MISO
C5 18pF
C3 18pF
Q1
L1
FB - 30Ohm
C1 100nF
C6 1uF
LED1
TLMS1000-GS08
R9 2K2
J1
R1 2K2
D1
OK2
TCLT1000
R4 2K2
R10 2K2
GND1
BOX2
HAMMOND-BOX-1551G
hass_doorbell
13-2-2022 15:19
Sheet: 1/1