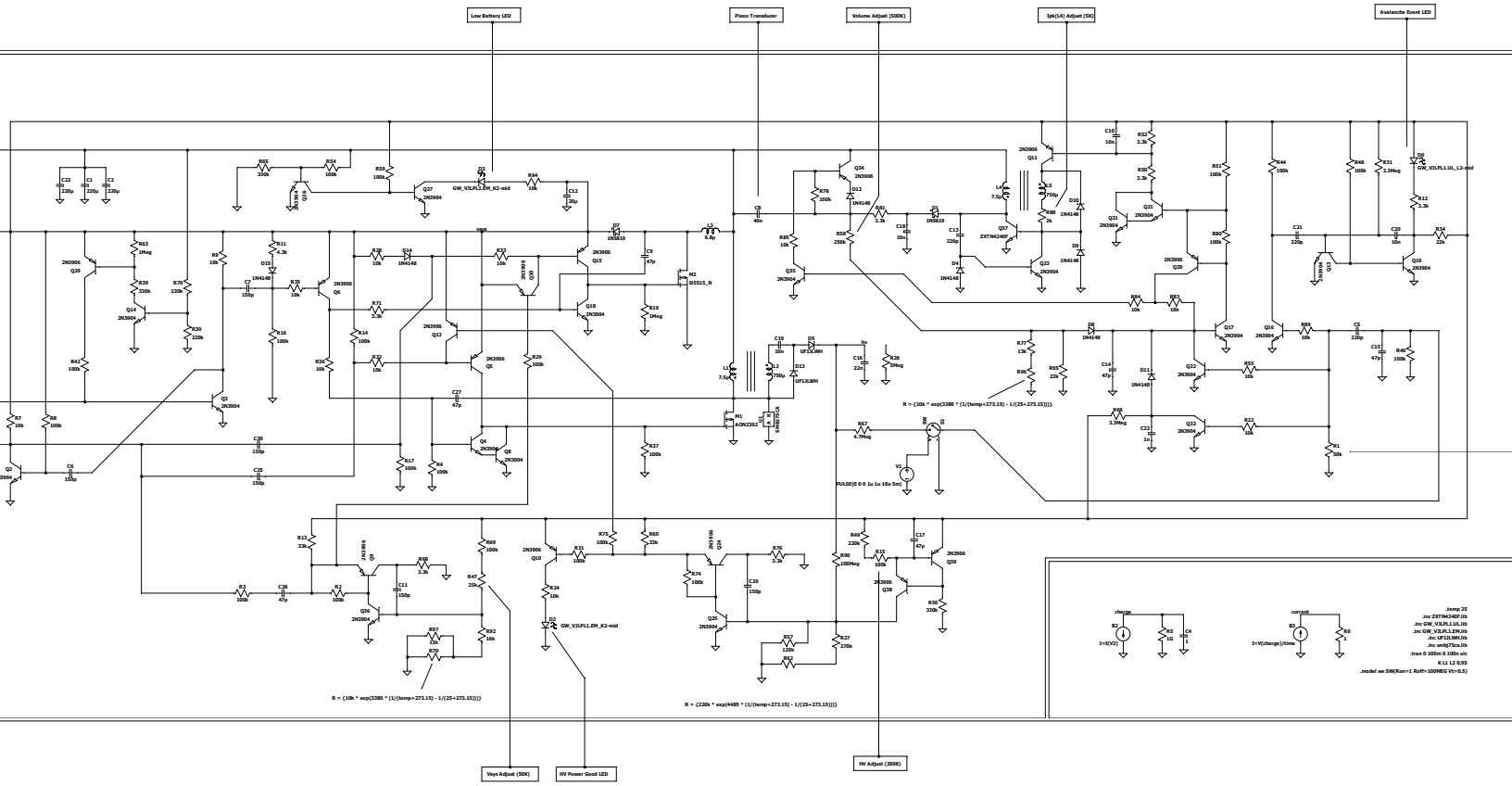
Low Battery LED
Piezo Transducer
Volume Adjust (500K)
Spk(14) Adjust (5K)
Avalanche Event LED
Vsys Adjust (50K)
HV Power Good LED
HV Adjust (200K)
R = (10k * exp(3380 * (1/(temp+273.15) - 1/(25+273.15))))
R = (220k * exp(4485 * (1/(temp+273.15) - 1/(25+273.15))))
PULSE(0 0 0 1u 1u 10u 5m)
.temp 25
.inc ZXTM240F.lib
.inc GW_V3LPL11E.lib
.inc GW_V3LPL1.EM.lib
.inc UF13LNH.lib
.inc smbj75ca.lib
.tran 0 100m 0 100n uic
K1 L1 L2 0.95
.model sw SW(Ron=1 Roff=100MEG Vt=0.5)