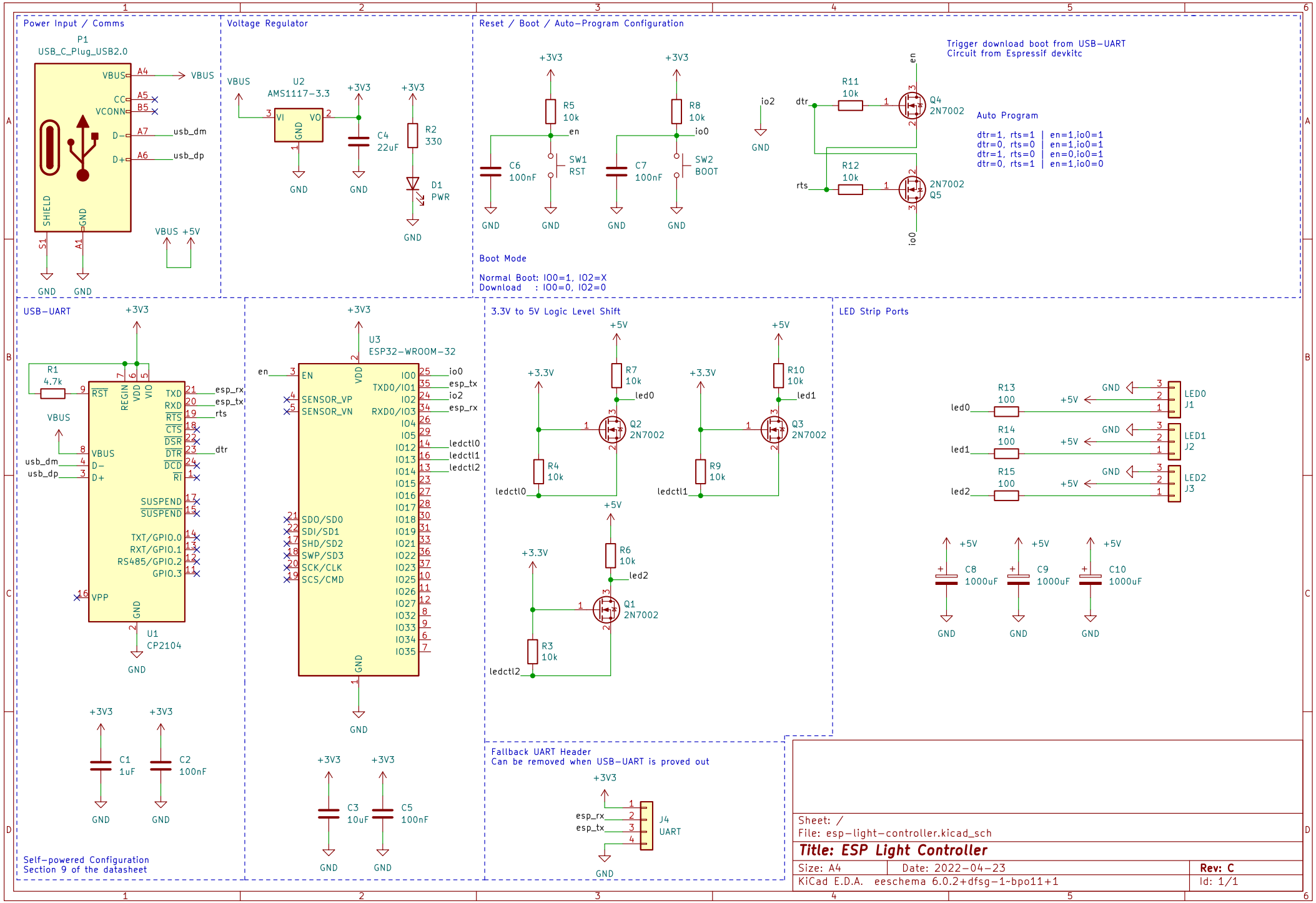
Power Input / Comms
P1
USB_C_Plug_USB2.0
VBUS
CC
VCONN
D-
D+
SHIELD
GND
usb_dm
usb_dp
VBUS +5V
Voltage Regulator
U2
AMS1117-3.3
VI
VO
+3V3
C4
22uF
R2
330
D1
PWR
Reset / Boot / Auto-Program Configuration
R5
10k
en
SW1
RST
C6
100nF
R8
10k
io0
SW2
BOOT
C7
100nF
io2
Trigger download boot from USB-UART
Circuit from Espressif devkitc
R11
10k
Q4
2N7002
R12
10k
Q5
2N7002
dtr
rts
Auto Program
dtr=1, rts=1 | en=1,io0=1
dtr=0, rts=0 | en=1,io0=1
dtr=1, rts=0 | en=0,io0=1
dtr=0, rts=1 | en=1,io0=0
Boot Mode
Normal Boot: IO0=1, IO2=X
Download : IO0=0, IO2=0
USB-UART
R1
4.7k
RST
REGIN
VDD
VIO
TXD
RXD
RTS
CTS
DSR
DTR
DCD
RI
esp_rx
esp_tx
rts
dtr
VBUS
D-
D+
SUSPEND
TXT/GPIO.0
RXT/GPIO.1
RS485/GPIO.2
GPIO.3
VPP
U1
CP2104
C1
1uF
C2
100nF
Self-powered Configuration
Section 9 of the datasheet
U3
ESP32-WROOM-32
EN
SENSOR_VP
SENSOR_VN
SDO/SD0
SDI/SD1
SHD/SD2
SWP/SD3
SCK/CLK
SCS/CMD
IO0
TXD0/IO1
IO2
RXD0/IO3
IO4
IO5
IO12
IO13
IO14
IO15
IO16
IO17
IO18
IO19
IO21
IO22
IO23
IO25
IO26
IO27
IO32
IO33
IO34
IO35
io0
esp_tx
io2
esp_rx
ledctl0
ledctl1
ledctl2
C3
10uF
C5
100nF
3.3V to 5V Logic Level Shift
+3.3V
+5V
R7
10k
R4
10k
Q2
2N7002
R10
10k
R9
10k
Q3
2N7002
R6
10k
R3
10k
Q1
2N7002
led0
led1
led2
LED Strip Ports
R13
100
R14
100
R15
100
LED0
J1
LED1
J2
LED2
J3
C8
1000uF
C9
1000uF
C10
1000uF
Fallback UART Header
Can be removed when USB-UART is proved out
J4
UART
Sheet: /
File: esp-light-controller.kicad_sch
Title: ESP Light Controller
Size: A4
Date: 2022-04-23
Rev: C
KiCad E.D.A. eeschema 6.0.2+dfsg-1~bpo11+1
Id: 1/1