OSHW

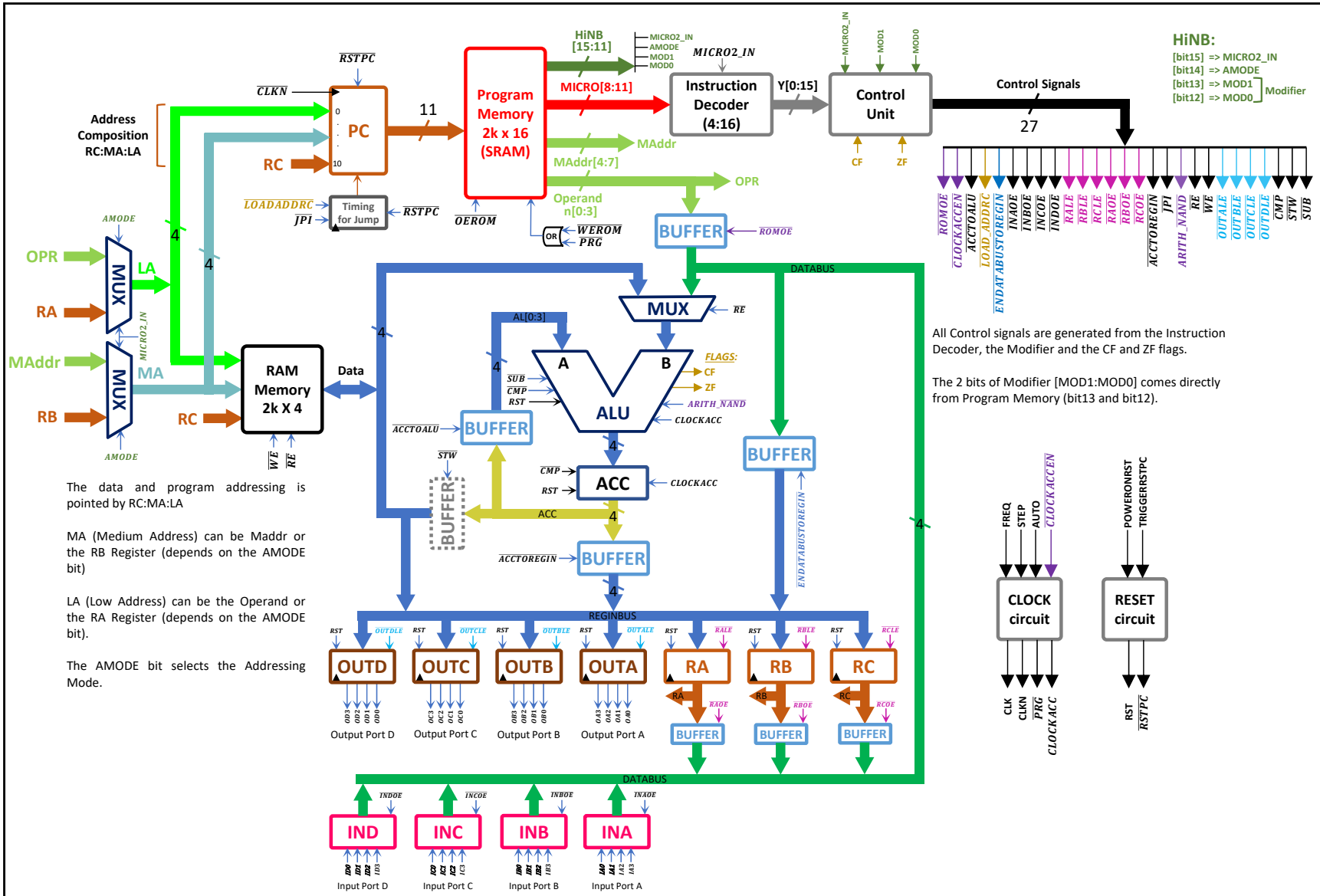

All Control signals are generated from the Instruction Decoder, the Modifier and the CF and ZF flags.

The 2 bits of Modifier [MOD1:MOD0] comes directly from Program Memory (bit13 and bit12).

The data and program addressing is pointed by RC:MA:LA

MA (Medium Address) can be Maddr or the RB Register (depends on the AMODE bit)

LA (Low Address) can be the Operand or the RA Register (depends on the AMODE bit).

The AMODE bit selects the Addressing Mode.

Block diagram of the *MikroLeo* architecture

Design: Edson Junior Acordi — 2020-2022

Version: v0.19 – April 20, 2021 — Revision: R1.01A – April 20, 2022

INSTITUTO FEDERAL Paraná Campus Paranavaí

MikroLeo 4-bit CPU

4-bit Didactic Microcomputer

Sheet: 1/1