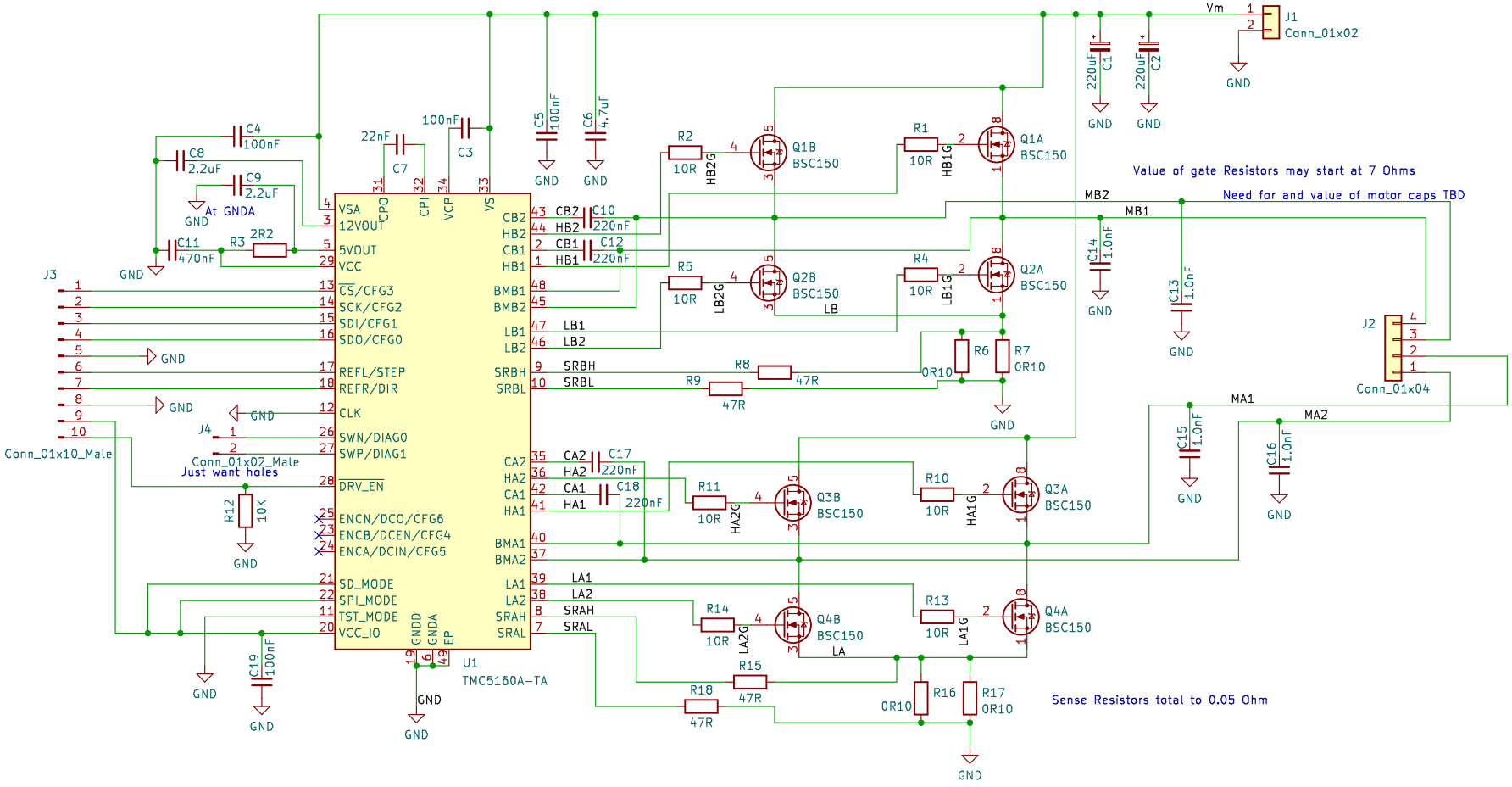
Vm
J1
Conn_01x02
GND
220uF
C1
C2
C4
100nF
C8
2.2uF
C9
2.2uF
At GNDA
C11
470nF
R3
2R2
22nF
C7
100nF
C3
C5
100nF
C6
4.7uF
J3
Conn_01x10_Male
J4
Conn_01x02_Male
Just want holes
R12
10K
C19
100nF
VSA
12VOUT
5VOUT
VCC
CS/CFG3
SCK/CFG2
SDI/CFG1
SDO/CFG0
REFL/STEP
REFR/DIR
CLK
SWN/DIAG0
SWP/DIAG1
DRV_EN
ENCN/DCO/CFG6
ENCB/DCEN/CFG4
ENCA/DCIN/CFG5
SD_MODE
SPI_MODE
TST_MODE
VCC_IO
GNDD
GNDA
EP
CPO
CPI
VCP
VS
CB2
HB2
CB1
HB1
BMB1
BMB2
LB1
LB2
SRBH
SRBL
CA2
HA2
CA1
HA1
BMA1
BMA2
LA1
LA2
SRAH
SRAL
U1
TMC5160A-TA
C10
220nF
C12
220nF
C17
220nF
C18
220nF
R2
10R
R1
10R
R5
10R
R4
10R
R11
10R
R10
10R
R14
10R
R13
10R
HB2G
HB1G
LB2G
LB1G
HA2G
HA1G
LA2G
LA1G
Q1B
BSC150
Q1A
BSC150
Q2B
BSC150
Q2A
BSC150
Q3B
BSC150
Q3A
BSC150
Q4B
BSC150
Q4A
BSC150
LB
LA
R8
47R
R9
47R
R6
0R10
R7
0R10
R15
47R
R18
47R
R16
0R10
R17
0R10
Value of gate Resistors may start at 7 Ohms
Need for and value of motor caps TBD
MB2
MB1
C14
1.0nF
C13
1.0nF
J2
Conn_01x04
MA1
MA2
C15
1.0nF
C16
1.0nF
Sense Resistors total to 0.05 Ohm