## BOARD TO BOARD CONNECTOR

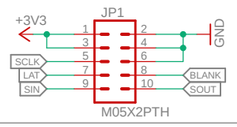


## LIGHT SENSOR CONNECTOR

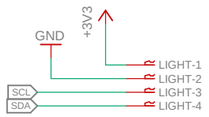


for connecting BH1750
GY-302 module

## REAL TIME CLOCK

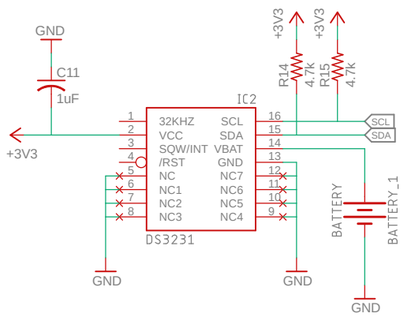


## ROTARY ENCODER

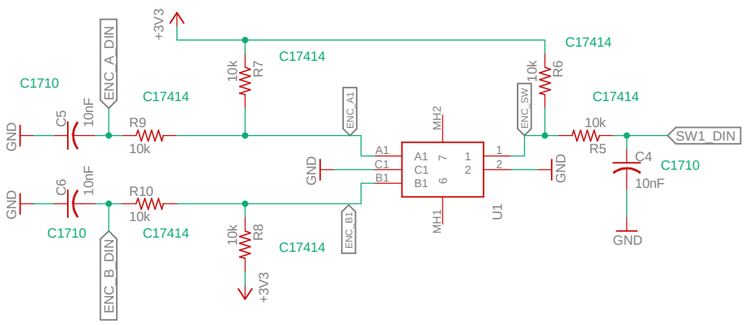


idyl.io/hardware-debounced-rotary-encoder/

## POWER IN 5V DC (or more)

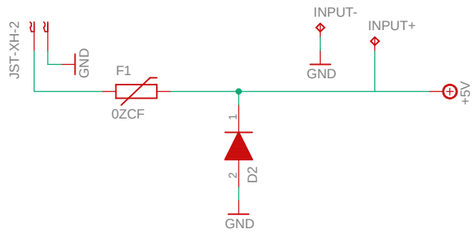


## EXTERNAL CONNECTORS

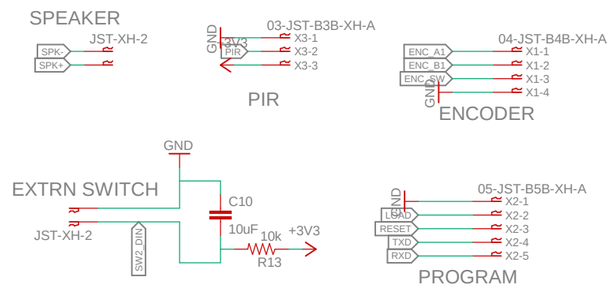


## DF PLAYER

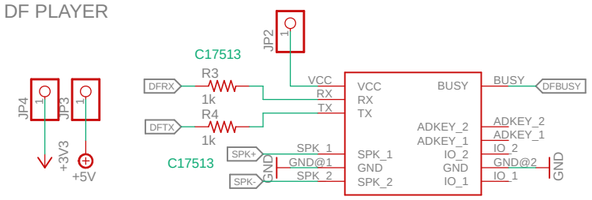


## SCHMITT TRIGGERS FOR INTERRUPTS

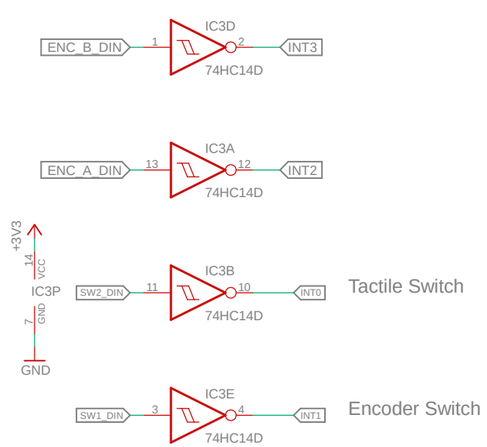


## ESP32

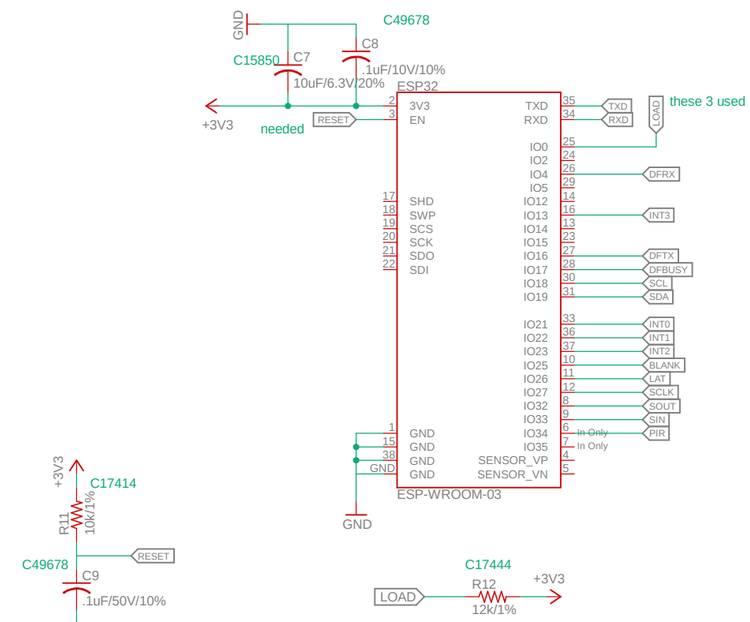


IN PREVIOUS THIS WAS N/C

## 3.6V POWER

Vout = Vref(1 + R2/R1)
where vref = 1.23V

we want 3.6V for output so using R1 = 1.15k, R2 = 2.2k
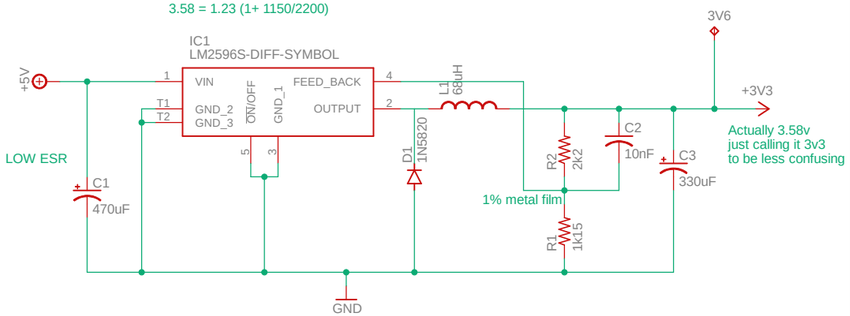
3.58 = 1.23 (1+ 1150/2200)