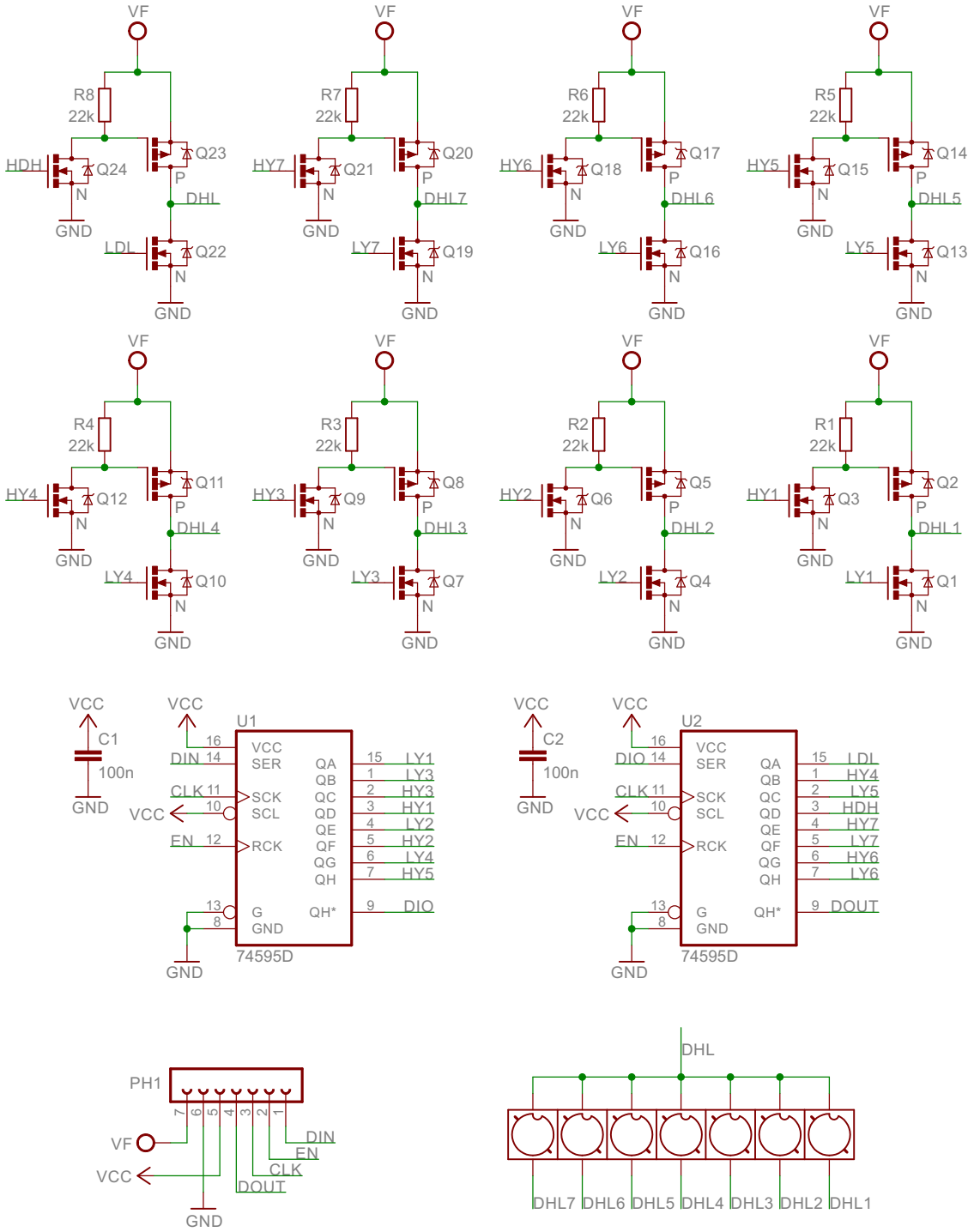

PCB MARKING: A - DIN B - EN C - CLK D - DOUT	1x7 FLIP-DISC DISPLAY	WWW.FLIPO.IO
	VCC: 3.3 - 5V VF: PULSE CURRENT 0.5A; 1ms	1x7 / V1
		DATE: 21.01.2023