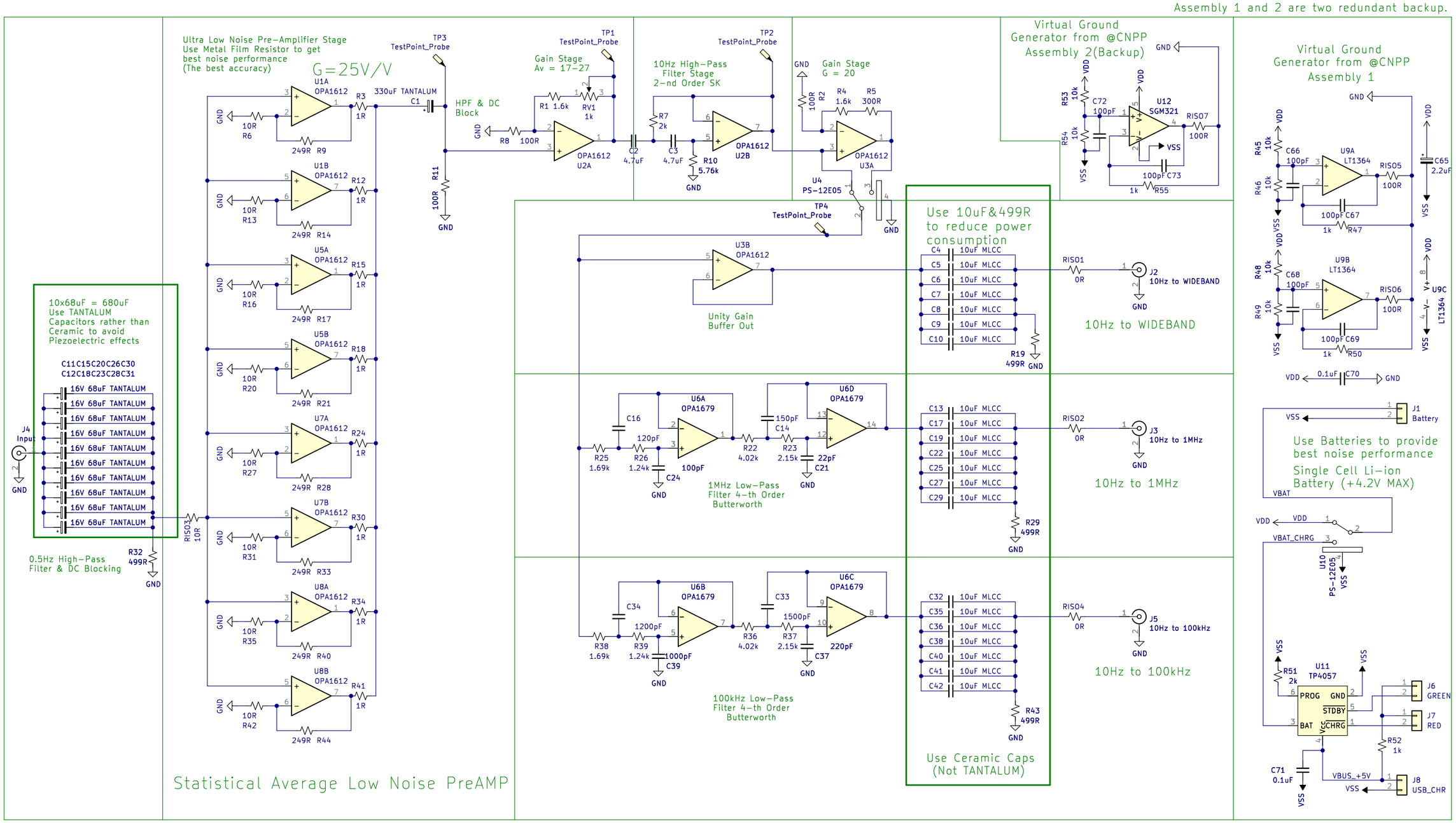

Power & decoupling

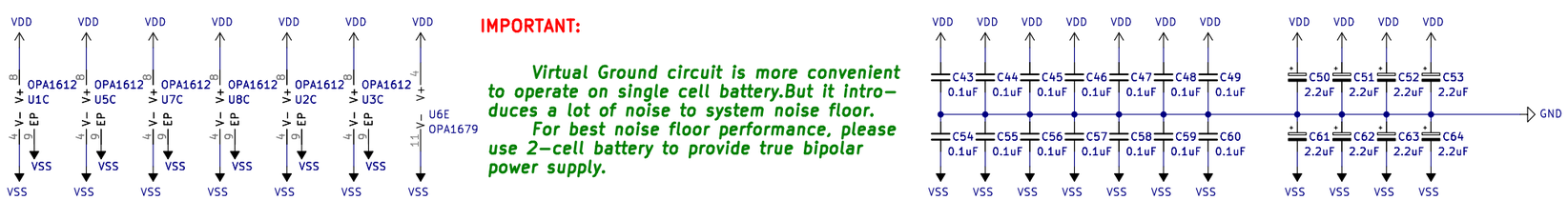

IMPORTANT:

Virtual Ground circuit is more convenient to operate on single cell battery.But it intro-duces a lot of noise to system noise floor.

For best noise floor performance, please use 2-cell battery to provide true bipolar power supply.

Sheet: /		
File: EmoeNAP.kicad_sch		
Title:		
Size: A3	Date:	**Rev:**
KiCad E.D.A. kicad 7.0.1		Id: 1/1