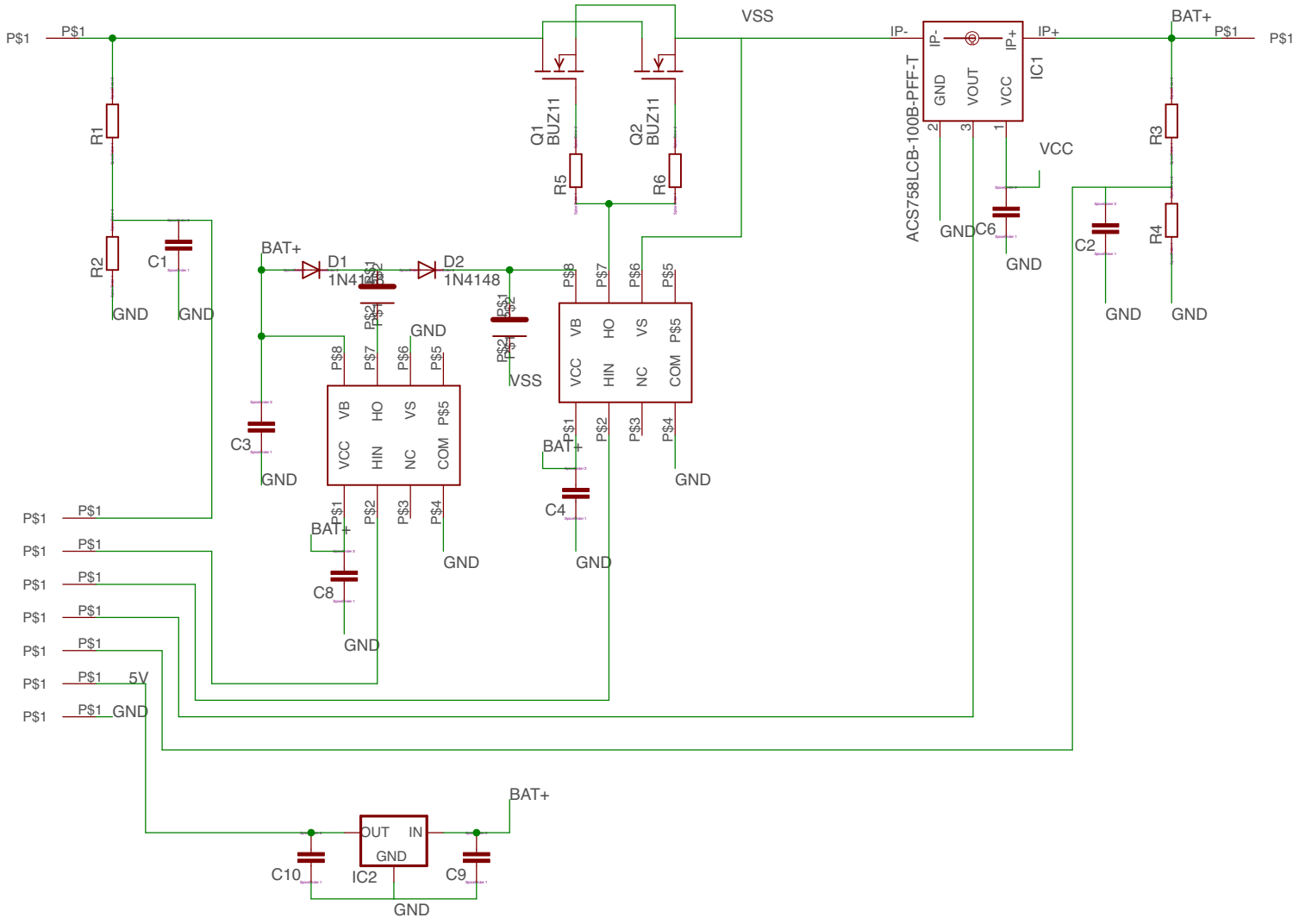
P$1
VSS
IP-
IP+
BAT+
Q1
BUZ11
Q2
BUZ11
R1
R2
R3
R4
R5
R6
C1
C2
C3
C4
C6
C8
C9
C10
D1
1N4148
D2
1N4148
ACS758LCB-100B-PFF-T
IC1
GND
VOUT
VCC
VB
HO
VS
HIN
NC
COM
P$8
P$7
P$6
P$5
P$1
P$2
P$3
P$4
5V
IC2
OUT
IN