Current Sense Amplifier

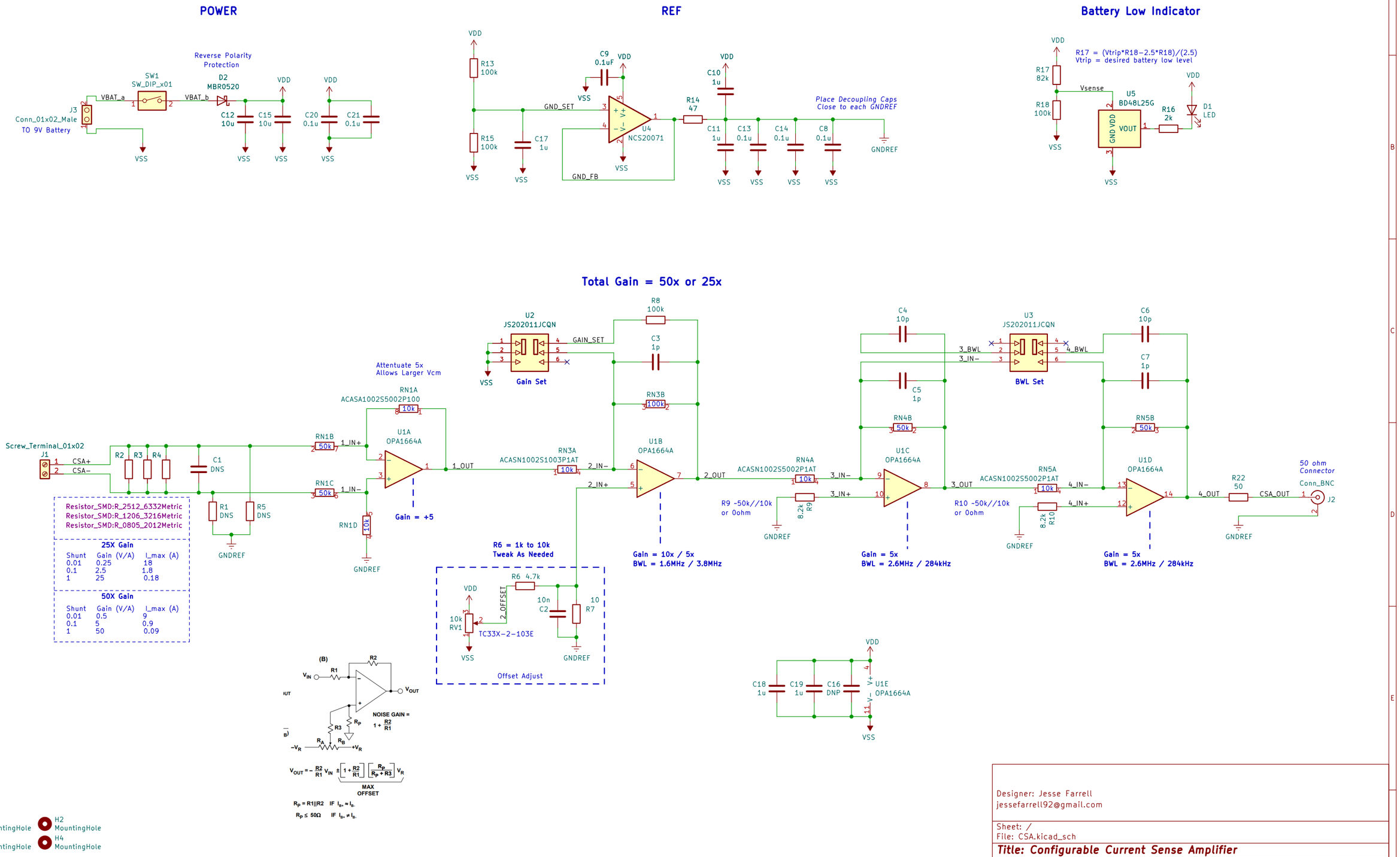

Designer: Jesse Farrell
jessefarrell92@gmail.com

Sheet: /
File: CSA.kicad_sch

Title: Configurable Current Sense Amplifier

Size: A3	Date: 2023-06-17	Rev: 2
KiCad E.D.A. kicad (6.0.10)		Id: 1/1