DC/DC LED Driver Specifications

IC: LED5000
Topology: BUCK
Input: 18 - 20 V
LED Device: Custom
Number of LED: 1
Number of Strings: 1
VF: 12 V **IF:** 600 mA **Dynamic resistance:** 250 mΩ

Operating Conditions

@Vin - min 18 V / max 20 V: 19 V
@Iout - min 600 mA / max 600 mA: 600 mA
@Ta - min -40 °C / max 150 °C: 25 °C

Actuals

fsw: 850 kHz
Ton: 763.56 ns
ILed: 602.41 mA
bandwidth: 99.86 kHz
phase margin: 104.06°
IC Tj: 33 °C
ΔTj: 8 °C

Circuit - Schematic

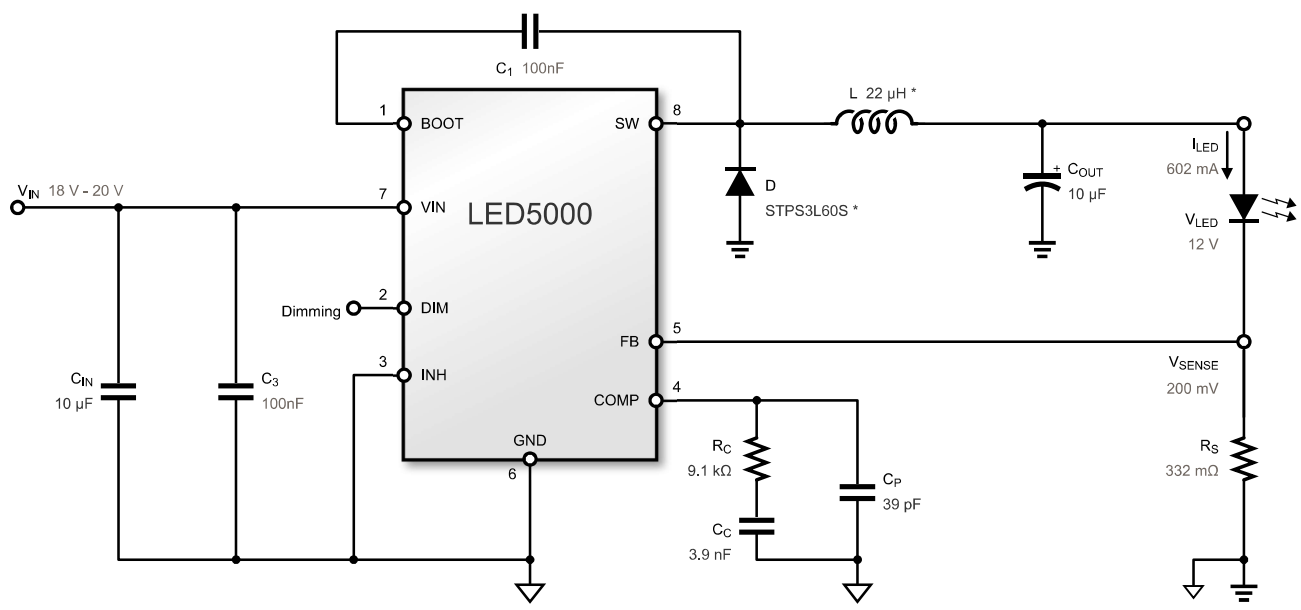

Feedback

Circuit - BOM

Type	Ref	Value	Description
LED Device	LED	LED	12 V - 600 mA
IC	IC	LED5000	LED5000 - HSOP 8 - STMicroelectronics
Capacitor	Cin	10 µF	50 V - 10% - muRata - GRM55DR61H106KA01K
Capacitor	Cout	10 µF	16 V - 20% - Panasonic - EEEFP1C100AR
Inductor	L *	22 µH	5.1 A - Coilcraft - XGL6060-223MEC
Diode	D *	STPS3L60S	3 A, 60 V - STMicroelectronics
Capacitor	Cc	3.9 nF	3.9 nF
Resistor	Rc	9.1 kΩ	9.1 kΩ
Capacitor	Cp	39 pF	39 pF
Capacitor	C1	100nF	50 V
Capacitor	C3	100nF	50 V
Resistor	Rs	332 mΩ	332 mΩ - PLoss = 240.96 mW

Feedback

Simulation: duty cycle 64.9 %

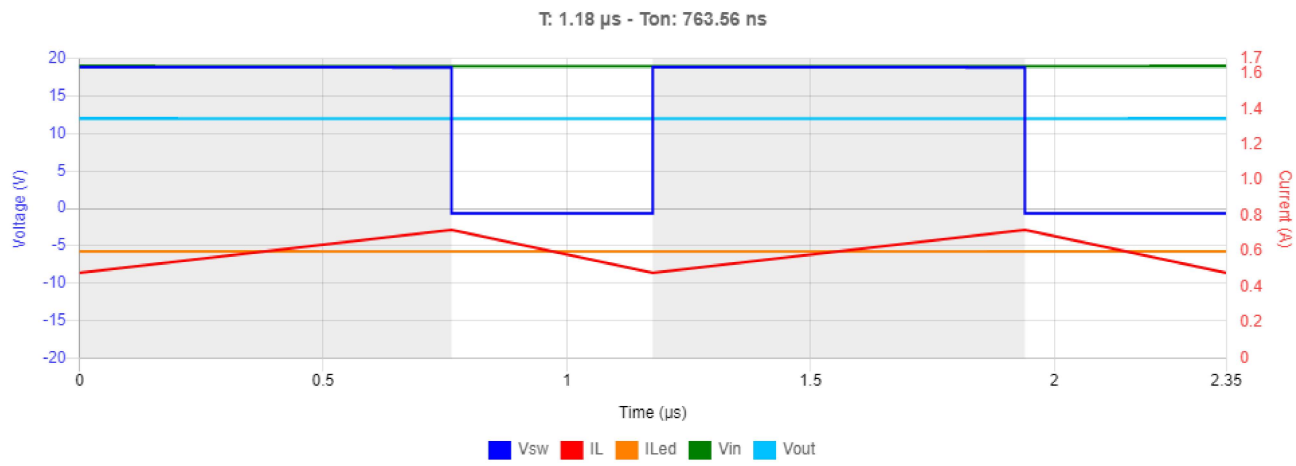

Efficiency: 93.9 %

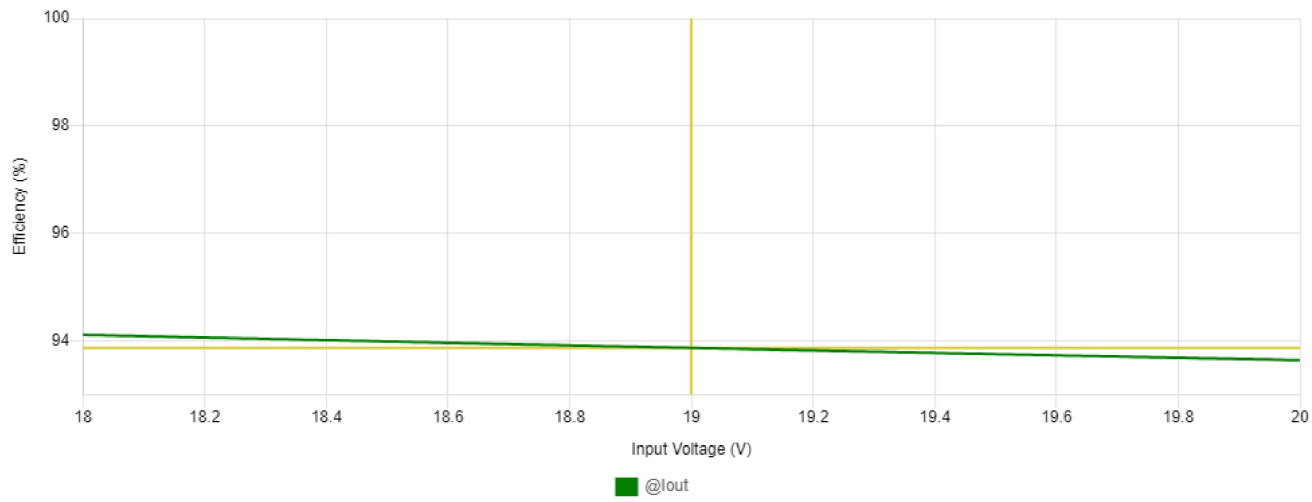

Feedback

Bode: fc = 99.86 kHz - phase margin = 104.1 °

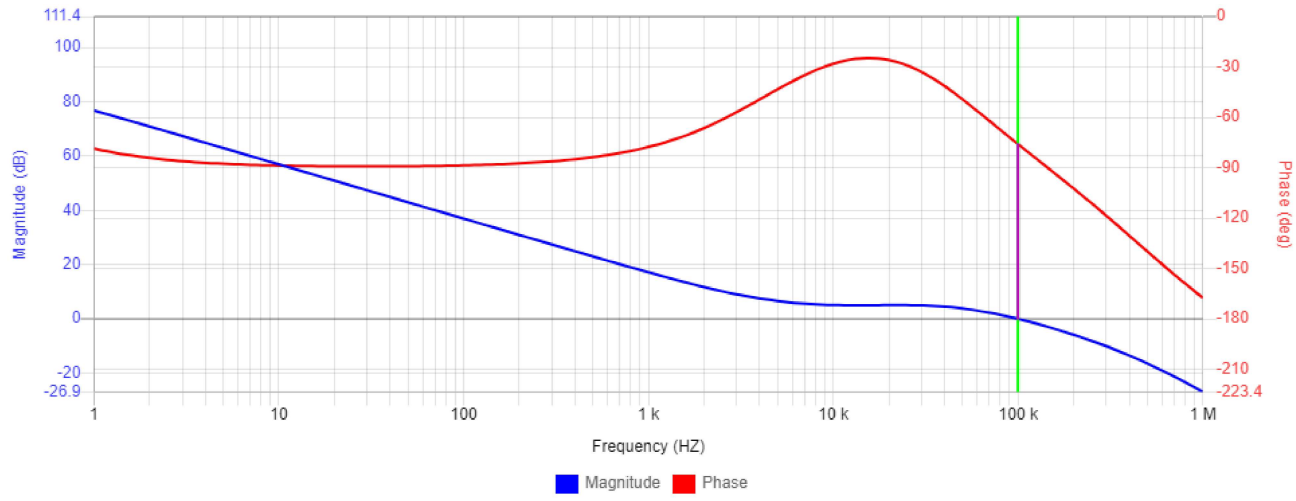

Feedback

Efficiency: 93.9 %

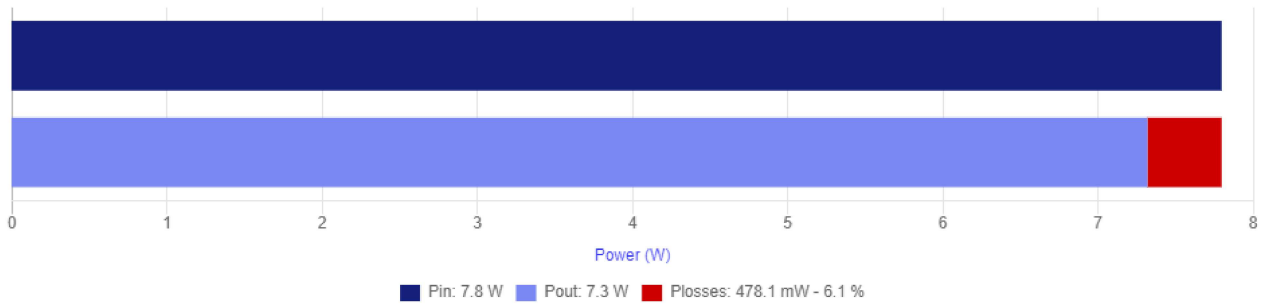

Losses details

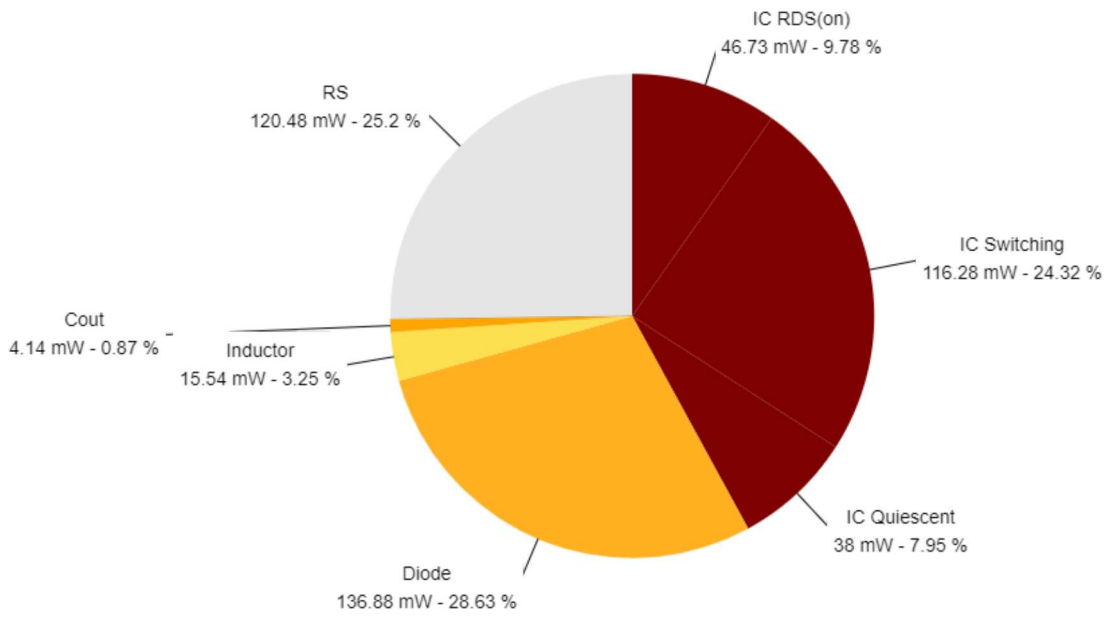

Feedback